Social Life and Local Wisdom to Creative Kite Arts in Yangjiabu, Weifang, Shandong Province, China in the Cultural Ecology Perspective

Susu Zhang

A Thesis Submitted in Partial Fulfillment of Requirements for
degree of Doctor of Philosophy in Fine and Applied Arts Research and Creation
May 2024

Copyright of Mahasarakham University

การนำไปใช้เนื้อเยื่อมูลเลอร์ทางชีวภาพสำหรับการเชื่อมโยงแสง ที่ไวต่อแสงโทโมกราฟขึ้นอยู่กับมุมมอง

วิทยานิพนธ์
ของ
Susu Zhang

พหูนํ ปณฺฑิโต ชีเว

เสนอต่อมหาวิทยาลัยมหาสารคาม เพื่อเป็นส่วนหนึ่งของการศึกษาตามหลักสูตร
ปริญญาปรัชญาดุษฎีบัณฑิต สาขาวิชาการวิจัยและสร้างสรรค์ศิลปกรรมศาสตร์
พฤษภาคม 2567
ลิขสิทธิ์เป็นของมหาวิทยาลัยมหาสารคาม

Social Life and Local Wisdom to Creative Kite Arts in Yangjiabu, Weifang, Shandong Province, China in the Cultural Ecology Perspective

Susu Zhang

A Thesis Submitted in Partial Fulfillment of Requirements
for Doctor of Philosophy (Fine and Applied Arts Research and Creation)
May 2024

Copyright of Mahasarakham University

The examining committee has unanimously approved this Thesis, submitted by Ms. Susu Zhang , as a partial fulfillment of the requirements for the Doctor of Philosophy Fine and Applied Arts Research and Creation at Mahasarakham University

Examining Committee

..... Chairman
(Asst. Prof. Niyom Wongphongkham , Ph.D.)

..... Advisor
(Asst. Prof. Vuthipong Roadkasamsri , Ph.D.)

..... Committee
(Assoc. Prof. Arkom Sa-Ngiamviboon , Ph.D.)

..... Committee
(Assoc. Prof. Suebsiri Saelee , Ph.D.)

..... Committee
(Asst. Prof. Metta Sirisuk , Ph.D.)

Mahasarakham University has granted approval to accept this Thesis as a partial fulfillment of the requirements for the Doctor of Philosophy Fine and Applied Arts Research and Creation

....
(Asst. Prof. Peera Phanlukthao , Ph.D.) (Assoc. Prof. Krit Chaimoon , Ph.D.)
Dean of Faculty of Fine - Applied Arts and Cultural Science Dean of Graduate School

TITLE Social Life and Local Wisdom to Creative Kite Arts in Yangjiabu, Weifang, Shandong Province, China in the Cultural Ecology Perspective

AUTHOR Susu Zhang

ADVISORS Assistant Professor Vuthipong Roadkasamsri , Ph.D.

DEGREE Doctor of Philosophy **MAJOR** Fine and Applied Arts Research and Creation

UNIVERSITY Mahasarakham University **YEAR** 2024

ABSTRACT

Kite-making in Yangjiabu, Weifang, Shandong Province, represents a unique traditional folk art embedded with profound cultural significance derived from long-standing community practices. It stands as a vital component of the local social fabric, reflecting the organizational structure, values, and way of life in the region. Beyond its cultural symbolism, kites serve as vehicles for cultural exchange, fostering community cohesion, and preserving collective memories and sentiments. Moreover, the production and trade of kites contribute to the local economy, offering employment opportunities and economic sustenance to residents. However, amidst evolving cultural dynamics and heightened demands for cultural products, there arises a need to contemplate how Yangjiabu kites can adapt to contemporary societal trends while fostering cultural innovation.

This qualitative study employs the frameworks of social life and cultural innovation to pursue three primary objectives: investigating the aesthetics, historical evolution, and socio-cultural context of kite-making in Yangjiabu, Weifang, China; examining the social dynamics surrounding kite art within the cultural ecosystem and the formation of its value chain; and projecting potential developmental trajectories for kite art in Yangjiabu, Weifang, Shandong Province. By delving into the historical evolution and operational mechanisms of the cultural value chain associated with Yangjiabu kites in Weifang, this study anticipates future directions and trends, offering novel insights and solutions for local folk art and design innovation.

The study discerns that Yangjiabu kites are emblematic of localized craftsmanship, shaped by the region's distinctive ecological milieu, embodying local wisdom and identity. However, contemporary trends toward mass production and cost efficiency have diluted the artistry and cultural essence of modern kites. Hence, preserving the essence of kite art amidst evolving paradigms necessitates careful consideration of what to retain and what to discard.

Through historical documentation and field research, the study scrutinizes

various facets of kite art production, including tools, techniques, materials, and socio-economic influences, aiming to enrich understanding and perpetuate its cultural legacy. By contextualizing kite art within broader socio-cultural narratives, this research illuminates the evolution of its symbolic significance and societal interactions, while also exploring avenues for modern cultural reinterpretation. This endeavor holds profound implications for reconciling economic development with folk culture, bridging generational aesthetic gaps, and fostering a deeper appreciation of cultural heritage.

In essence, Weifang kites epitomize the fusion of history, society, and culture unique to the region. Through anthropological inquiry and socio-historical analysis, this study endeavors to elevate awareness and appreciation of Weifang's folk culture, embedding it within the broader cultural value chain. By exploring the genesis, evolution, and management of folk art culture, stakeholders are empowered to innovate and design products that honor its rich heritage. Thus, this study advocates for the integration of traditional folk culture into contemporary design practices, paving the way for its preservation, revitalization, and sustainable utilization in modern society.

Keyword : Shandong Yangjiabu Kites, Cultural Ecology, Social Life, Local Wisdom

พหูนํ ปณฺฑิโต ชีเว

ACKNOWLEDGEMENTS

As I near the completion of my doctoral dissertation, reflecting on this journey filled with challenges and discovery fills my heart with boundless gratitude. Recalling the entirety of this dissertation writing process, I am keenly aware of the arduousness of academic research. Therefore, I extend my deepest gratitude to all the teachers, classmates, family members, and friends who have accompanied me on this academic odyssey.

First and foremost, I express my profound appreciation to my supervisor, Prof. Vuthipong Roadkasamsri. Under his guidance, I have acquired invaluable knowledge and honed my research skills. His passion for academic inquiry, meticulous work ethic, and unwavering commitment to teaching have left an indelible mark on me. I am immensely grateful for his insightful guidance and caring support throughout this research journey. His mentorship will continue to shape my future endeavors in research and teaching, serving as a beacon of inspiration.

I also extend my heartfelt thanks to Prof. Dr. Supachai Singyabuth and Prof. Dr. Metta Sirisuk, whose erudition, rigor, and dedication to academia I deeply admire. Additionally, I am grateful to all the committee members who evaluated my thesis and provided invaluable insights into my research. Special thanks are due to Miss Narumon Hankla from the college office for her invaluable assistance in completing my studies.

To my classmates and friends in Thailand, your care and support during challenging times have been a source of comfort and warmth, for which I am truly thankful.

Lastly, I extend my deepest gratitude to my parents, husband, and son for their unwavering support and boundless love. It is through their steadfast encouragement that I have been able to pursue and fulfill my dreams. Thank you for being my pillars of strength.

Susu Zhang

TABLE OF CONTENTS

Page

ABSTRACT ..... D
ACKNOWLEDGEMENTS ..... F
TABLE OF CONTENTS ..... G
List of tables ..... P
List of figures ..... Q
CHAPTER I INTRODUCTION 1
1.1 Research Background 1
1.2 Research Objectives 16
1.3 Research Question 17
1.4 Definition of Terms 17
1.4.1 Weifang Kites in This Study 17
1.4.2 Weifang Yangjiabu 17
1.4.3 Weifang Yangjiabu Kite Art 17
1.4.4 Shandong Weifang Yangjiabu Kite Heirloom 18
1.4.5 Cultural Ecology 18
1.4.6 Social Life 18
1.4.7 Cultural Value Chain 18
1.4.8 Cultural Innovation 18
1.5 Scope of Research 19
1.5.1 Field of Research 19
1.5.1.1 Main study sites 19
1.5.1.2 Research location 19
1.5.2 Timing Scope 19

1.5.2.1 Research learning cycle 19
1.5.2.2 Years of field work:2021-2023 20
1.5.3 Research Unit of Analysis 20
1.6 Research Methodology 20
1.6.1 Research Populations 21
1.6.1.1 Local people in Yangjiabu, Weifang, Shandong Province 21
1.6.1.2 Outside staff 21
1.6.2 Instrumentation for Data Collection 22
1.6.3 Data Collection 22
1.6.3.1 Fieldwork 22
1.6.3.2 Documentation data collection 22
1.6.4 Data Analysis 22
1.6.5 Research Practice 22
1.6.6 Research Presentation 23
1.7 Literature Review 23
1.7.1 Literature Review on Research Text 23
1.7.2 Literature Review of Research Concept 27
1.7.2.1 Social life 27
1.7.2.2 Cultural innovation 28
1.7.3 Literature Review of Research Model 28
1.8 Concept, Theory, and Conceptual Framework 28
1.8.1 Concepts and Arguments of This Research 28
1.8.2 Research Conceptual Framework 29
1.9 Section Structure 30
1.10 Benefits of Research 30
CHAPTER II Enhancing Kite Development in Yangjiabu, Weifang, Shandong, China 32

2.1 Introduction 32

2.2 Cultural Ecology Overview 32

2.3 Reasons for the Generation of Kites in Yangjiabu, Weifang, Shandong Province 35

2.3.1 Physical and Geographic Conditions 35

2.3.2 Production Methods and Conditions of Output of Raw Materials for Production 38

2.3.3 Historical and Human Factors 40

2.4 Types of Kites in Yangjiabu, Weifang, Shandong Province Craftsmanship and Local Wisdom 43

2.4.1 The Sects of Kites in Yangjiabu, Weifang, Shandong Province 43

2.4.1.1 Traditional folkways 43

2.4.1.2 Traditional artisan factions 44

2.4.1.3 Modern innovation faction 45

2.4.2 Types of Kites in Yangjiabu, Weifang, Shandong Province 46

2.4.2.1 String kites 47

2.4.2.2 Board kites 47

2.4.2.3 Kite with soft wings 48

2.4.2.4 Hard-winged kite 49

2.4.2.5 Cubic kites 49

2.4.2.6 Dynamic kites 50

2.4.3 Handicraft of Yangjiabu Kites in Weifang, Shandong Province 50

2.4.3.1 Strap 51

2.4.3.2 Paste 54

2.4.3.3 Coloration 58

2.4.3.4 Fly 60

2.4.4 Intersection of Folk Art: The Relationship between Kites and New Year's Paintings 61

2.5 The Development of Kites in Yangjiabu, Weifang, Shandong Province 62

2.5.1 Kites are the Product of Human Innovation and Practice.....63

2.5.2 The Original Kites of Yangjiabu, Weifang, Shandong Province 64

2.5.2.1 Modeling leaves and hats.....65

2.5.2.2 Modeling flags 65

2.5.2.3 Modeling sails, tents 66

2.5.2.4 Modeling bird.....66

2.5.2.5 Modeling archery 67

2.5.3 The Succeeding Ecology of Kites in Yangjiabu, Weifang, Shandong Province 68

2.5.4 The New Ecology of Kites in Yangjiabu, Weifang, Shandong Province 76

2.6 Conclude 80

CHAPTER III The Social and Cultural Ecology of Kites in Yangjiabu, Weifang.....82

Introduction.....82

3.1 The Development and Relationship of Kite Folk Art in Social Life in Yangjiabu, Weifang, Shandong Province 83

3.1.1 Shandong Weifang Yangjiabu Kites are the Result of People's Practice 83

3.1.2 Refining the Interplay of Kites with Production and Lifestyle in Yangjiabu, Weifang, Shandong Province 83

3.1.3 The Relationship Between Kites and Witchcraft, Folklore and BELIEFS in Yangjiabu, Weifang, Shandong Province 85

3.1.4 The Relationship Between Kites and Folk Art in Yangjiabu, Weifang, Shandong Province 92

3.2 The Role and Value of Weifang Yangjiabu Kites in Social Life 98

3.2.1 Practical Value.....99

3.2.2 Literary Value.....101

3.2.3 Artistic Value 102

3.2.4 Economic Value 103

3.2.5 Identification 104

3.3 Imbalance and Balance in the Cultural Ecology of Kites in Yangjiabu, Weifang, Shandong, China 105

3.3.1 Cultural Ecosystem Imbalance and Balance 106

3.3.2 The Imbalance of the Kite Culture Ecosystem in Yangjiabu, Weifang, Shandong, China 107

3.3.2.1 Changes in heritage groups and spaces 107

3.3.2.2 Impact of modern technological means of production on traditional handicrafts 108

3.3.2.3 The impact and dissolution of modern lifestyle on kite culture 109

3.3.2.4 Shock to traditional concepts of cultural inheritance 109

3.3.2.5 Low rate of transformation of cultural resources into cultural industries 110

3.3.3 Balancing the Ecosystem of Kite Culture in Yangjiabu, Weifang, Shandong Province 112

3.3.3.1 Preservation and continuation of traditional skills and ways of passing them on 114

3.3.3.2 Cultural revival of traditional festivals and festivals 115

3.3.3.3 Relationship between commercial and cultural values 116

Conclude 119

CHAPTER IV Managing the Cultural Value Chain: Traditional Folk Art in Cultural Ecology and Innovation 121

Introduction 121

4.1 Managing Cultural Value Chain Development in Cultural Ecological Balance 122

4.1.1 From the Folk Custom of "Letting Go of Bad Luck" to Commercialization 122

4.1.2 From a Family Workshop to the Creation of a Kite Factory 123

4.1.3 From Folk Art to International Kite Festival.....128

4.1.4 Formation of the Kite Industry Chain and Cultural Value Chain 133

4.2 Exploring Yangjiabu Kites in Weifang's Cultural Value Chain: Opportunities and Challenges.....134

4.2.1 Changes in Materials, Heritage Groups, and Functions.....134

4.2.2 Impact of Modern Production Techniques on Traditional Handicrafts 136

4.2.3 Collision of Local and Foreign Cultures 136

4.3 Development and Cultural Innovation of Yangjiabu Kites in Weifang, Shandong: Cultural Value Chain Perspective 139

4.3.1 Traditional Folk Art and the Transmission of Cultural Memory.....139

4.3.2 Re-conceptualization of Traditional Skills and Culture and Preservation of Folk Art Ecosystems.....139

4.3.3 Cultural Exchange and Integration to Promote the Innovative Development of Folk Art and Culture.....141

Conclude 141

CHAPTER V Innovative Design of Kites in Yangjiabu, Weifang, Shandong Province 143

Introduction.....143

5.1 Analysis of Cultural and Artistic Resources of Kites in Yangjiabu, Weifang, Shandong Province 144

5.1.1 Moral of the Kite.....146

5.1.2 The Beauty of Kite Materials 147

5.1.3 Kite Craft Techniques.....147

5.1.4 Kite Composition 148

5.1.4.1 Symmetrical, balanced layout.....148

5.1.4.2 Conceptual layout 149

5.1.4.3 Distributed layout.....150

5.1.5 Kite Flower Patterns 151

5.1.6 Kite Color Scheme 154

5.1.7 Artistic Expressions to Satisfy Visual Effects in Flight 156

5.2 Analysis of the Current Shandong Weifang Yangjiabu Kite Art Products 159

5.3 Design Concepts and Ideas 161

5.3.1 Physical Space and Cultural Ecology 162

5.3.2 Local Wisdom and Cultural Value Base of Folk Art 163

5.3.3 Development Management of the Cultural Value Chain of Kites in Yangjiabu, Weifang, Shandong, China 170

5.3.4 Opportunities and Challenges in Managing the Cultural Value Chain of Yangjiabu Kites in Weifang, Shandong, China 172

5.4 Sketching and Discussion Screening 173

5.4.1 Generation of Design Sketches 173

5.4.1.1 Conceptualization of design sketches 173

5.4.1.2 Design sketching(part) 178

5.4.2 Expert Discussions and Selection of Design Options 184

5.5 Innovative Design Practice Based on Kites in Yangjiabu, Weifang, Shandong, China 186

5.5.1 Exploring 'The View of Creation from 'Bundling': Rediscovering Local Design Language 186

5.5.1.1 Creative ideas and design drawings 186

5.5.1.2 The creative process 189

5.5.1.3 Demonstration effect and interpretation 192

5.5.2 The Creation and Practice of 'The View of Creation from 'Bundling': Reviving Local Design Language 194

5.5.2.1 Creative Ideas and Design Drawings 194

5.5.2.2 The creative process 198

5.5.2.3 Demonstration effect and interpretation 202

5.5.3 Creative Design and Practice of the Work "Fusion - Collision of Past and Present 204

5.5.3.1 Creative ideas and design drawings 204

5.5.3.2 The creative process 207

5.5.3.3 Demonstration effect and interpretation 210

5.6 Evaluation and Improvement of Design Results 212

5.6.1 Market Research 212

5.6.2 Expert Validation and Evaluation 213

5.6.3 Improvement of Design Results 218

Conclude 218

CHAPTER VI Research Summary, Discussion, and Suggestions 220

6.1 Research Summary 220

6.1.1 Exploring Kites and Cultural Ecology in Yangjiabu, Weifang, China 220

6.1.2 Development and Socio-Economic Changes in Yangjiabu Kite Production, Weifang, China 221

6.1.3 Generating and Managing Kite Culture Value Chain in Yangjiabu, Weifang: Cultural Innovation 223

6.2 Research Discussion 225

6.2.1 Influence of Cultural Ecology and Social Life on Yangjiabu Kite Development in Weifang 227

6.2.2 The Role of Kites in Yangjiabu's Cultural Ecology and the Cultural Value Chain 231

6.2.3 Exploring Cultural Value Chain Management for Kite Culture Innovation in Yangjiabu, Weifang 234

6.3 Research Recommendations 237

6.3.1 Academic Advice 237

6.3.2 Social Suggestions 238

6.3.3 General Advice 238

REFERENCES 240
BIOGRAPHY 243

พหูนํ ปณฺฑิโต ชีเว

List of tables

Page

Table 1 A test of the effect of wind speed on kite flying 36

Table 2 List of bamboo weaving stores in Wangcun from the late Qing Dynasty to the Liberation Period 40

Table 3 Overview of kite development in Weifang from the end of the 18th century to the end of the 20th century 79

Table 4 Shandong Weifang Yangjiabu Kites Common Artistic Themes Classification Table.....86

Table 5 Common harmonic symbols of good luck in kites 89

Table 6 List of some kite manufacturers, brands, and products in Wangcun.....128

Table 7 Schematic diagram of the production value of the kite industry in Wangcun.....129

Table 8 Number of reports on the kite festival by Weifang Daily in the two weeks before and after the opening ceremony of the festival each year from 2012 to 2018.....131

Table 9 Contemporary Weifang Yangjiabu Kite International Exchange Activities Statistical Table (Part).....138

Table 10 Evaluation of products by experts and heads of enterprise workshops 215

Table 11 Consumer ratings of products 216

Table 12 Financial contribution to stakeholders 217

พหูน ปณฺฑิโต ชีเว

List of figures

Page

Figure 1 Map of kite-making techniques and wind resources in the Bohai Sea region 37
Figure 5 String Kites 47
Figure 6 Board Kites 48
Figure 7 kite with soft wings 49
Figure 8 Hard-winged kite 49
Figure 9 Weifang Yangjiabu multi-layer three-dimensional figure kite 50
Figure 10 Kite Making Process - Handling Bamboo Strips, Taping 53
Figure 11 Kite Making Process - Mulberry Paper Making 56
Figure 12 Kite-making process-paste 58
Figure 13 Kite-making process-coloration 60
Figure 14 Kite-making process-string tie 60
Figure 15 Wooden printing plates and Yangjiabu woodblock prints 62
Figure 16 Ancient Painting "Hundred Sons" 71
Figure 17 Yangjiabu Woodblock Prints "Ten Beautiful Pictures" 72
Figure 18 Weixian Bailanghe Beach Fair 74
Figure 19 The 1st Weifang International Kite Festival 1984 77
Figure 20 The opening ceremony of the 1984 Weifang International Kite Festival, and the "Kite Exhibition" held during the 1984 Weifang International Kite Festival to display the kites made by Weifang amateur kite enthusiasts. 77
Figure 21 Principle of kite take-off 83
Figure 22 Weifang Yangjiabu Kites 102
Figure 23 Yangjiabu Kite Culture Folk Village 114

Figure 24 Villager Mr. Wang Xingsheng rolling a kite skeleton. 124

Figure 25 Factory employees cut fabrics, pack them for shipment, and warehouse 125

Figure 26 Fully automatic fabric pulling machine and kite factory warehouse .126

Figure 27 Kites and kite-supporting products.....126

Figure 28 Layout of kite factory in Wangjiazhuangzi community 127

Figure 29 Current Development of Kite Folk Art in Yangjiabu Village, Weifang 132

Figure 30 Roadmap of Chinese kites around the world.....137

Figure 31 Shandong Weifang Yangjiabu Kites 147

Figure 32 Shandong Weifang Yangjiabu Kites 152

Figure 33 Yangjiabu Kites in Flight.....157

Figure 34 Kite Tourism Souvenirs (Miniature Swallow Kites) Sold in Yangjiabu 159

Figure 35 Kite tourism souvenirs sold in Yangjiabu (miniature butterfly kites, dragon head centipede kites).....160

Figure 36 Yangjiabu Kite Cultural Tourism Derivatives Sold on the Internet....160

Figure 37Weifang International Kite Museum sells kite cultural and creative products.....160

Figure 38 Design Sketch 1 178

Figure 39 Design sketch 2.....179

Figure 40 Design sketch 3.....179

Figure 41 Design sketch 4.....179

Figure 42 Design sketch 5.....180

Figure 43 Design sketch 6.....180

Figure 44Design sketch 7.....181

Figure 45 Design sketch 8.....181

Figure 46 Design sketch 9.....182

Figure 47 Design sketch 10 182
Figure 48 Design sketch 11 183
Figure 49 Design sketch 12 183
Figure 50 Design Sketch 13 184
Figure 51 Demonstrates the design sketching and selection process 185
Figure 52 Hand-drawn Design 1 188
Figure 53 Hand-drawn design 2 188
Figure 54 Hand-drawn design 3 188
Figure 55 The process of making the design work 1 190
Figure 56 The process of making the design work 2 190
Figure 57 The process of making the design work 3 191
Figure 58 Design Showcase 1 192
Figure 59 Design Showcase 2 193
Figure 60 Hand-drawn design 4 196
Figure 61 Hand-drawn design 5 197
Figure 62 Hand-drawn design 6 198
Figure 63 The process of making the design work 4 199
Figure 64 The process of making the design work 5 200
Figure 65 Design Showcase 3 202
Figure 66 Design Showcase 4 203
Figure 67 Hand-drawn design 7 206
Figure 68 Hand-drawn design 8 206
Figure 69 Hand-drawn Design 9 207
Figure 70 The process of making the design work 6 208
Figure 71 The process of making the design work 7 209
Figure 72 The process of making the design work 8 210
Figure 73 Design Showcase 5 210

Figure 74 Design Showcase 6 212

Figure 75 Assessment and scoring by experts and relevant beneficiaries 214

พหูนํ ปณฺฑิโต ชีเว

CHAPTER I

INTRODUCTION

1.1 Research Background

Taking Weifang kites as a case study, this study explores the close relationship between kite culture and the life of the common people and reveals the role and status of Weifang kites as a folkloric thing in the material and spiritual life of the people in Weifang, Shandong Province. Whether the kite custom is presented in the form of craft folklore, or the form of amusement folklore, or even folklore culture industry, it is the fulfillment and adjustment of the needs of the general public's life. Kite culture includes kite-making technology and kite-flying custom culture. According to historical records, the germ of kite first arose in the Qilu land[1] during the Spring and Autumn Period and the Warring States Period2, and Han Fei Zi - Outer Reserve Said recorded that Mo Zhai (478-392 BC) lived in Lu Mountain (the area of present-day Qingzhou, Shandong Province), and "chopped up wood for a harrier, and it became a harrier three years later, and flew for one day. and failed". The "wooden harrier" crafted by Mozi3 may be the earliest attempt to make kites in China. According to "Mozi Luwen zhi", Mozi's student Lu Ban made a bamboo "wooden magpie" according to his teacher's idea and flew it in the air for three days and three nights, which can be regarded as the budding state of Chinese kites (Xiao & Dai, 2023).

Some scholars believe that the kite originated from the bucket hat, the bucket hat was produced in the transition period of mankind from the collection of fishing and hunting to agricultural farming to prevent rain and heat appliances similar to today's straw hat. Legend has it that an old farmer's bucket hat was occasionally blown up by the wind, and he tried his best to catch up with the bucket hat's rope and the bucket hat seemed to be intentionally doing hide-and-seek with him as if it was fluttering in the air, which was very beautiful, and the old farmer realized that it was fun to play with the bucket hat regularly. The people around him also found it fun to imitate each other after seeing it, and as a result, this activity was gradually accepted by the common people and evolved into the kite-flying custom later today. Some scholars also believe that kite flying is the ancient people's imitation of the natural phenomenon of the wind-swirling leaves flying in the sky (AN & TING, 2017). Some believe that kites were made by imitating the principle of sails that drive boats

---

1 Qilu Land, refers to Shandong Province. Because Shandong Province is the ancient land of Qi and Lu, so it is called Qilu Land. "Qilu" and "Shandong" are both historically formed geographical terms, the two refer to the exact same geographical scope, can be generalized.

2 The Spring and Autumn Period (770 BC-476 BC) is commonly used to refer to the first half of the Eastern Zhou historical period in China. The Spring and Autumn period ended in 476 BC (the first year of King Yuan of Zhou), totaling 295 years.

3 Mozi (476 or 480 B.C.-390 or 420 B.C.E.), named Zhai (翟), was a native of Song at the end of the Spring and Autumn period and the beginning of the Warring States period, an ancient Chinese thinker, educator, scientist, and militarist, and the founder and main representative of the Mohist school of thought.

forward with the help of wind power, the latter attributing the origin of kites to the revelation of the situation of tents being lifted by high winds in northern China. There is also the Bird of Prey Theory, which considers the origin of kites in terms of their naming, shape, structure, and patterns. Historically, kites were initially named after flying birds such as "cranes", "magpies" "warblers", etc. The state of kites when flying at high altitudes is very similar to that of flying birds with wings spreading and soaring. In addition to the fact that the ancients worshipped birds, some experts and scholars who study kites have speculated that kites were probably created by early humans as a simulation of flying birds (Ji & Shi, 2018).

Regardless of the origin theory, it is believed that kites are the result of Chinese ancestors observing, simulating, and creating natural things or phenomena in their social lives. Just as language, dance, and other art forms are often interpreted as products of imitation of natural and social phenomena, the imitation theory is one of the more recognized doctrines explaining the origin of kites. According to the history and legend that Mozi and Lu Ban created kites, both the master's "wooden crane" and the apprentice's "bamboo magpie" were inspired by flying birds. That is to say, the kite is an elite or special character simulating the natural things or phenomena dancing with the wind, with the help of their ingenuity and inspiration suddenly created, by the wind flying "similar things" because it meets and satisfies the needs of the majority of people for entertainment and games in the majority of the common people to circulate, spread. Therefore, it is further said that individual and collective wisdom re-creation is the main reason for the formation of various folklore things, including kites (Chen, 2017).

From the birth of a newborn folklore thing to be accepted by the majority of people until it becomes a fixed pattern of life not overnight, there is always a process from recognition to acceptance and then stereotyped as a customary habitual system. Kite flying is also the same, there is also a long process of trying to produce a recognized and perfected development. After the birth of the kite did not immediately become the general public collective heritage, enjoy folklore or folk activities, but was mastered in the hands of some elite figures for the upper class, mainly used in the military field, or flying high in the air to spy on the enemy, or used to transmit information over long distances. At the beginning of the Han Dynasty4, there was much folklore and literature about Zhang Liang and Han Xin's use of kites for military reconnaissance and detection; paper-making had not yet been invented at that time, and the kites were likely to be made of silk or animal skins, with a high cost of production, and the masses were unlikely to know what a kite was at all (Zhang, 2017).

The improvement and development of papermaking largely contributed to the development of kites, and kites made of paper-paper warblers already existed in the

4 The Han Dynasty (202-220 BC) was a great unifying dynasty that followed the Qin Dynasty and was divided into two periods: the Western Han Dynasty and the Eastern Han Dynasty.

North and South Dynasties5. When Hou Jing revolted during the Xiao and Liang Dynasties in the Southern Dynasty and surrounded Nanjing, the emperor's officials were trapped in the city of Taichung and were cut off from the reinforcements, and when it was very urgent, "there was a sheep carer who offered to make a paper warbler, tied it with a long rope, wrote a pardon in it, and let it go from the wind, hoping to reach the army." See "Ziji Tongjian", "Southern History" Volume VII, but unfortunately unsuccessful. The new Tang book Tian Yue biography of Tian Yue plotted the Tang siege of Lin Luo city, the city guard Zhang also "urgent paper for the wind warbler, more than a hundred feet high, over the Yue camp, Yue make good shooter shot, can not and." This shows that the use of kites in the military has been continued to the Tang Dynasty6, with a history of nearly six hundred years. However, the long-term prosperous and stable economic and cultural life of the Tang Dynasty had already made the functional role and popular body of kites change dramatically, transforming the military behavior of the upper class into a game and entertainment custom with popular people as the main body (Liu, 2016).

In addition, the name of kites has a historical process of change, from the initial germ to the subsequent development of thousands of years has experienced a process from vulgar to elegant, from elegant to vulgar, elegant and vulgar and complement each other. During the Spring and Autumn and the Warring States period, Mozi's wooden crane and Lu Ban's bamboo magpie were the buds and prototypes of kites. Gulls, cranes, eagles, warblers, and magpies are different common names for sparrowhawks, which are a kind of raptor that can hover in the air for a long period with its wings spread out, but its wings do not move at all. In the early Han Dynasty, the legend about the kite of Zhang Liang and Han Xin was different from different historical records, but the name of the kite was "warbler" even though the maker and the material used for making the kite were not the same. Mr. Chen Yulin said in "Kite Knowledge" that Yuanyuan and Crane are the same kind of flying birds, i.e. the Sparrowhawk mentioned above. In the period of North and South Dynasties, according to the content of Xiao Liang Mi Zhao, "the crane sends the reinforcement army to reward the silver hundred taels" to judge that they call the kite a "crow". Warblers, cranes, magpies, and parrots are the same kind of birds in different regions and at different times with different common names. It can be seen that people are always good at naming kites according to the way they fly in the air, especially like a crane or an eagle spreading its wings (Zhang, 2016).

Later, from the Tang and Song dynasties to the early Qing Dynasty7, the title of kites was mainly paper warbler, and due to the differences in regions and their

5 The Northern and Southern Dynasties (420-589), a collective term for the Southern (420-589) and Northern (439, or 386-581) Dynasties, refers to the north-south confrontation in Chinese history that lasted from the demise of the Eastern Jin Dynasty and the establishment of the Song Dynasty in the Southern Dynasties in 420 to the unification of the country in 589 by the Sui Dynasty.

6 The Tang Dynasty (618-907) was a great unifying dynasty of the Central Plains in Chinese history, following the Sui Dynasty, with a total of twenty-one emperors, and enjoying a reign of 289 years.

7 The Qing Dynasty (1616-1912), the last feudal dynasty in Chinese history, had twelve emperors and was first known as the Later Jin Dynasty.

customs and cultures, the northern part of the early Qing Dynasty was called paper warbler and the southern part was called paper crane. The sparrowhawk in the north is called a warbler, and the one in the south is called a crane. The Qing kite expert Cao Xueqin's 'Southern Crane and Northern Warbler Kao Gong Zhi' illustrates this point. The term "kite" was first used in the Five Dynasties period in the book "Inquiries from the Record", which reads: "In the Five Dynasties, Li Ye made a paper warbler in his palace, which led the wind as a play, and then he used bamboo as a flute at the head of the mandarin birds, so that the wind went into the bamboo, and the sound was like a kite, hence the name of the kite". The paper warbler in Li Ye's palace was not only shaped like a bird, but also sounded pleasantly like a bird, and this kind of "kite", which won by its sound, emphasized the sound characteristics of the kite, and changed the long tradition of naming the kite by its shape. The name of "kite" is heavy on "sound" and sounds elegant, which is in line with the aesthetic interest of royalty, and the name of "paper warbler" is heavy on the shape and very common, which is called by ordinary people. It can be seen that the changes in the structure and form of the kite caused a change in the name, and the common bird name was replaced by the elegant word "kite" (Zhao, 2017). However, people have always preferred to use the name of paper warbler. The reason is that the term "paper warbler" has been used since the early Han Dynasty, has been passed down for thousands of years, and has been widely accepted by the common people with strong stability. Until the end of the Qing Dynasty and the Republic of China, "kite" replaced "paper warbler" as the popularized name.

Nowadays, the paper warbler has been used in ancient and modern times, transformed into an elegant name, and the kite has become a popular name. This shows that folk things and folklife are both stable and mutable, which is determined by the concepts and psychology formed in the long-term historical life of the people who enjoy it. With the gradual improvement of human civilization, the kite-flying custom has been inherited from generation to generation after more than 2,000 years of evolution and development. Therefore, the kite-flying custom is a folk culture inheritance phenomenon accumulated by human society over a long period, and it is a life pattern agreed upon by the group society. It is the result of combining the material life and spiritual life of the common people and the inevitable product of adapting to the requirements of both. Although kite-flying folklore is a "non-dominant mode of life" in the cultural life of the common people, its long history has already proved that it plays an important folk function in the common people's life, and it has become an important cultural element of the modern civilized society (Zou, 2021).

Some people say that the kites of the world are in China, and the kites of China are in Weifang. Although this statement seems to be far-fetched, it can at least show that Weifang is one of the oldest origins among the four major kite-producing regions in China, namely Beijing, Tianjin, Weifang, and Nantong. Every kind of folk matter grows up in a specific natural environment and humanistic background and is

constantly transformed, enriched, supplemented, and perfected by the groups of common people living in this context. If we don't study and analyze the objective circumstances that affect the emergence and development of kite folklore, we will lack a comprehensive understanding of the origin of kites.

First of all, Weifang is situated in a geographic location that has been very important in the economy and culture of the whole country of China from the ancient time of Dayu to the present. Theoretically speaking, Weifang kite culture should be nourished by both marine and inland cultures, so the cultural heritage is quite deep. Weifang is located in the middle of the Shandong Peninsula8, neighboring Yantai and Qingdao in the east, Dongying and Zibo in the west, Rizhao and Linyi in the south, and Bohai Bay and Laizhou Bay in the north, which "is known as 'Peninsula Corridor', which is a necessary road from the mainland to Shandong Peninsula in China", and also is an ancient county of Qilu. Historically, there used to be a large area of saline mudflats in the northern part of Shouguang, Changyi, and Hanting in the Weifang area, which was a natural place for kite flying. "Kites live by the wind, and there is no such thing as a kite without wind. Weifang's climate belongs to the East Asian warm-temperate monsoon climate, with a lot of wind and rain in early spring, a lot of rain in summer and fall, and a lot of cold winds in winter, which is a natural condition and a natural advantage for kite flying (An, 2018). One of the five emperors, Dayu, divided the world into nine states, from the Bohai Sea to the top of Mount Tai as Qingzhou, and the present city of Weifang was within the jurisdiction of Qingzhou at that time. During the Xia, Shang, and Zhou Dynasties9, the ancient states of Weifang were scattered all over the world, and Jiang Taigong's feudal state of Qi included all of present-day Weifang City except Wulian County. After the Qin and Han Dynasties, different administrative organizations were set up in the area. It promoted the historical development of Weifang's economy and culture.

Secondly, Weifang is a place of great talent, with a profound cultural background, rich and colorful culture, and art, storing a variety of folk culture factors, laying the foundation for the birth of kites and other folk culture and art, and many ancient sages and historical celebrities were born on this piece of land. Mozi and Lu Ban of the Spring and Autumn and Warring States period both lived in the area of present-day Weifang and their creative practice of "praying for wood as a warbler" and "chipping bamboo as a magpie" is regarded as the ancient source of Weifang kites and even Chinese kites. According to some historical records, Weifang kites have not been discontinued since the Spring and Autumn and Warring States Periods. No wonder the people of Weifang boldly and proudly declare that "Weifang is the hometown of Chinese kites". According to historical records, Weifang kites have never been interrupted since their birth, the Tang Dynasty Weifang kites have been

8 Shandong Peninsula, the largest peninsula in China, extends into the Bohai Sea and Yellow Sea in eastern Shandong Province, east of the Jiaolai Valley.

9 Xia, Shang and Zhou, abbreviation of dynasties, means the abbreviation of the three Chinese dynasties of Xia, Shang and Zhou.

quite common, and kite flying has also become a very active folk game and folklore, especially children are keen on recreational activities. As contained in the Shouguang County Zhi, twenty volumes of the Qing Jiaqing10 five years engraved book, the first two months of February, the children's generation of bamboo for the tire, paste as paper warbler-shaped, butterfly-shaped and other shapes and so on, tied to a long line to release in the air (Zhang, 2017).

During the Song Dynasty11 Weifang kites continued to develop and improve based on the prosperity of the Tang Dynasty, and the custom of kite-flying also became a living subject for the literati to engage in literary and artistic creation. The Tang and Song dynasties were a period of prosperity and development of kites, a period of its great mutation from art form to function and role, i.e., the stereotyped period when kites were transformed from practical to recreational, and from upper-class military behavior to popular amusement folklore at all levels of society, for a variety of reasons (Jia, 2016).

The Tang and Song dynasties were an important period of high socioeconomic and cultural prosperity and stability in China's history, with world leaders in culture science, and technology, steady socio-economic development, and people living and working in peace and contentment, and people demand spiritual activities were increasing, which was reflected in the increase in the demand for games and entertainment in the secular life, which to a certain extent contributed to the prosperity and development and even the cultural changes of the folk art and amusement activities, including the kites (Zhao, 2017). Urban culture prospered with the rise of urban commercial culture. Urban folklore and marketplace culture were rich and colorful, and the hooks and tiles prepared a special place for artists to display their talents and develop their skills so that various folk arts and folklore such as kites not only had a broad mass base but also gained a broad stage or space for development. In addition, the paper-making industry was developed at that time, and the inexpensive paper provided a cheap cost for making kites, which laid a material foundation for the popularization of kite-making folklore in society. Festivals gradually increased with the improvement of living standards. Kites adapted to the objective needs of the times and randomly entered into festival activities, melting into the festival custom of trekking and picnicking during the Qingming Festival and becoming popular for a while. This was determined by the characteristics of the kite-flying activity itself and was also the result of the choice of the needs of the common people's lives (Hao, 2023).

Since then, kite flying has become an indispensable folklore activity for the common people before and after the Qingming Festival, and has been gradually

10 Jiaqing was a yearly name of the Qing Dynasty, following Qianlong and preceding Daoguang, for a total of 25 years.

11 The Song Dynasty (960-1279) was a dynasty in the central plains of Chinese history that started from the Yuan Dynasty under the Five Dynasties and Ten Kingdoms, and was divided into two phases: the Northern Song Dynasty (960-1127) and the Southern Song Dynasty (1127-1279), with a total of eighteen emperors, enjoying the country for three hundred and nineteen years.

perfected with the advance of the times. The Ming and Qing dynasties are the heyday of Chinese kites, and Weifang kites have reached their peak. There were many kite stores in and around Weifang County, and more than ten professional kite stores represented by Tang Family Kites, which were Zhang Family Kites, Guo Family Kites, Hu Family Kites, Yang Family Kites, Yang Family Kites, Han Family Kites, Sun Family Kites and so on. A big kite specialty market was formed on the old Bailang River beach, and many foreign merchants gathered there to complete large kite transactions (Liu, 2016).

The Qing Dynasty poet Pei Xingchuan described Weifang's kite market in this way: "The anvil kite market is on the east city wall, and visitors are busy buying and choosing kites, with new patterns to attract patrons, and butterflies and lovebirds on the line". Another example is "Tang Xiang's father and son were good at business, selling New Year's paintings to Yangliuqing, the store was not far from the crossroads, and they sold kites during the cold food." At that time, the lively and prosperous kite trading scene could be seen. By now, Weifang kites, after several generations of people's life practice and artistic innovation, have become independent and formed a system of their own, forming a wide range of categories and rich local flavors.

In the Republic of China12, the custom of kite-flying was still very popular in Weifang, and the lead-printed copy of "Weifang County Zhiru Folk Customs of the Years", Volume 42 of the Republic of China in the 30th year of the People's Republic of China, recorded that "the children made paper warblers and swings for the play at the Ching Ming Festival. The paper warblers were made in different ways, with cranes, swallows, butterflies, cicadas, and other kinds of characters, all of which were exquisite and marvelous. Or to reed do bow tied paper warbler on the back, the wind blowing, sound like a kite, so the name kite". At that time, the government had also successfully organized three kite fairs (Zhang, 2015).

Since the new China, Weifang kites, as an ancient and traditional folk craft folklore and amusement folklore, possessing the advantages of timing, geographical advantage, and human harmony, have been revitalized and energized with the spring breeze of reform and opening up, and have found a newer fit with the life of the common people, and its potential functions have been re-examined and explored. The special background of reform and opening up and market economy pushed kites from the region to the whole country and the whole world to become a folk culture shared by the whole country and the whole world. Gradually, a complete value chain of kite culture has been formed, while its managers, management mode, and other aspects are changing. In recent years, Weifang kites have been developed and utilized as a folk cultural product and a folk cultural resource, and have entered the period of industrialization. Family workshops, individual enterprises, township enterprises, and

12 The Republic of China (1912-1949), abbreviated as "ROC". Located in eastern Asia and bordered by the Pacific Ocean to the east, it was the name of the country and the year of the People's Republic of China during the period from the fall of the Qing Dynasty to the establishment of the People's Republic of China.

private enterprises manufacturing and producing kites have risen rapidly, and self-production and self-sale, export, and foreign exchange have become an important force of the Weifang economy. The combination of kite folk culture and economic and commercial behavior generates new economic growth points. The cultural industry of Weifang kites originated from the traditional kite commercial activities in Weifang (Lv, 2016).

During the Ming and Qing dynasties, kite markets and stores in Weifang were quite mature. The rise of commercial cities in China and the development of handicrafts opened up new ways for kite development. In Tianjin, Weixian, Jinan, Qingdao, Nantong, Jiangsu, Guangdong, Hebei, Anhui, and some other areas, due to the popularization and development of kite-flying activities of the folk, there appeared kite monopoly markets of different sizes and kites as a kind of folk handicrafts sold well in the market.

After the Xinhai Revolution, under the influence of the New Culture Movement, Chinese kites took a big leap. Kite making developed towards the trend of specialization, and kite making became a kind of family sideline in Weixian, Gaomi, Tianjin, Beijing, etc. A large number of painters from all over the world also joined in kite making. A large number of painters from all over the world also joined the ranks of kite-fixing and painting, so that the folk kite-fixing and painting skills were greatly improved, forming the situation of the simultaneous coexistence of the brushwork and heavy color, the literati painting style and the folk painting style represented by folk artists, and the situation of the sharing of the professional and the non-professionals. Many high-grade kites tied and painted by kite artists and painters began to make their way to the world's folk arts and culture as cultural artifacts, along with other folk arts, and once became the favorites of the Panama Universal Exposition (Zhang, 2016).

The Weifang International Kite Festival is not only the most influential kite event in China but also an important platform for the intersection of culture, art, and commerce. Since 1984, the festival has gradually grown from a local event to an international cultural exchange event, attracting tourists and kite lovers from all over the world. After decades of development, the Weifang Kite Festival has transformed from a simple kite-flying activity to a comprehensive festival integrating kite display, cultural exchange, business negotiation, and tourism. During the festival, there are not only wonderful kite-flying performances by kite masters from all over the world, but also demonstrations of kite-making techniques, seminars on kite history and culture, and colorful commercial activities. The local government departments have considered the situation and formulated the policy of "kites lead the line, culture set up the stage and economy sing the show", opening up a thousand-mile folklore tourism line with great local cultural characteristics. Gaomi's paper-cutting, cloth toys, porcelain, clay figures, face painting, Yangjiabu woodblock New Year's Eve, and other folk crafts such as wood carving, embedded silver in the kite under the role of

the kite to the country and the world to promote the development of Weifang's economy and culture, the world has also recognized the Weifang. Weifang government departments take advantage of its own deep traditional culture and rich folk culture, take the strategic road of "cultural economy", and actively guide the development of the functions and potentials of folk culture, the kite culture shows more attractive charms and gets wider and more lasting inheritance and circulation in the life of common people.

Weifang Kite Festival has an important influence on the development of Yangjiabu kites, and Weifang Kite Festival provides an international-level platform for displaying and exchanging Yangjiabu kites. Every year at the festival, Yangjiabu kites can show their unique artistic style and exquisite production skills to the world on this stage. This kind of display not only enhances the popularity and influence of Yangjiabu kites, but also brings the opportunity to communicate with international kite-making masters and enthusiasts, and promotes the improvement and innovation of the skills. Weifang Kite Festival is not only a festival but also an event of cultural inheritance and integration. As a representative of intangible cultural heritage, Yangjiabu kites were able to be inherited and developed in a broader cultural context through the display and exchange of the festival. At the same time, kite cultures and skills from all over the world mingle here, bringing new creative inspirations and development ideas for Yangjiabu kites. In addition, the Weifang Kite Festival has had a significant impact on the local social economy. Tourism, shopping, catering, and other consumer activities during the festival effectively boosted the local economy and brought great business opportunities to the Yangjiabu kite industry. In addition, the festival also provides an excellent opportunity for Yangjiabu kites to promote and brand, which helps to increase the popularity and sales of the products. At the same time, the Weifang Kite Festival not only enhances the residents' sense of identification with the local culture but also stimulates their pride and awareness of the protection of Yangjiabu kites as a cultural symbol. This cultural self-confidence and social identity provide strong spiritual support for the sustainable development of Yangjiabu kites. To summarize, the Weifang Kite Festival has played a pivotal role in promoting the development of Yangjiabu kites. It not only provides Yangjiabu kites with an international-level exhibition and communication platform but also provides a good opportunity and platform to promote cultural inheritance and integration, commercial and economic development, social identity, and cultural confidence.

This study chooses Weifang kite culture as the research text for the following reasons. Since the reform and opening up, Chinese people have increasingly realized the great significance of the national traditional culture to the modernization and national rejuvenation, therefore, the call for research and protection of intangible culture is very strong in academic circles, and the folk traditional culture is an organic part of the intangible cultural heritage, which has become an important object of protection and rescue. I was interested in the investigation and research of folk art in

Shandong, because not only is there a rich and colorful folk culture there, but it is also my hometown, which makes it easy to analyze and study folk matters from a subjective point of view, and my specialized training as an art and design student enables me to adopt an objective and appropriate research methodology (Song, 2015).

This paper will take Yangjiabu in Weifang City as the basic field point to systematically research and interpret the traditional kite craft, historical narratives, and concepts contained in kites, as well as the commercialized development of kites and the operation and management of the cultural value chain in Yangjiabu, Weifang. It can be said that Weifang kites are still developed under the research vein of material culture, and kites are unique for their traditional cultural symbolism and market economy.

As a local product, what is the relationship between kites and local society as well as social and cultural changes? As an intangible cultural heritage item, how does the cultural meaning of kites combine with economic development to form some kind of material and cultural complicity? How has kite flying as a local folk art evolved from folklore to an international event? How does it form a cultural value chain and how does it operate and change? All these questions have prompted me to systematically interpret the Weifang kites from a wide range of social, cultural, economic, and historical backgrounds.

From the literature collected, most of the concerns and research on kites are focused on the crafts and flying techniques, while the mechanism and principle of the survival of Yangjiabu kites are just like the ecosystem in biology, its survival and development are not isolated, and it has a close relationship with the social environment in which it survives. In the cognition of its survival or decline, we must jump out of the limitations of the folk art itself and put it back into the human ecosystem, and "observe" it from a larger and higher angle and vision, so that we can fundamentally and essentially understand and grasp its developmental vein, survival mechanism and change rules. Its special composition contains complex factors, such as geographic location, geographic environment, historical evolution, regional culture, way of life, and so on, and then produces a matching folk art ideology, which is the people in their daily lives and activities to seek survival, tend to profit, and avoid harm to the expression of the life of the demand (Hao, 2023). As a folk art, Yangjiabu kites naturally and necessarily function as "props" to satisfy such demands, assuming the role of a functional carrier of people's life demands in their secular lives. As a functional carrier, the folk art form naturally serves the purpose of its existence and realizes the value and meaning of its existence, and the pure and unique purpose also shapes the definite and patterned folk art existence form. In addition, with the change in cultural ecology and the change in the kite's social function, the current kite art form as a kind of folk traditional art can not remain unchanged in the change and development of society but should be developed and innovated continuously,

therefore, the kite's cultural value, as well as the operation and management mode of the cultural value chain, should be studied in depth and analyzed, so that this kind of folk art and culture can be placed into the whole ecosystem as well as the generation and development of the cultural value chain for research and analysis. Studying and analyzing this folk art culture into the whole ecosystem and the cultural value chain is of special significance and value, hoping to explore the humanistic value and folkloric function of kites in modern society as well as the cultural value chain formed, and the same time to carry out the experimental practice of cultural innovation, trying to study and explore the countermeasures and paths of cultural innovation and application of kite art in Weifang, Shandong Province, Yangjiabu, in the modern society (Dave et al., 2020).

Studying the natural ecological environment, cultural environment, as well as social life background, is one of the ways to explore the source of kite culture wisdom generation. Weifang is located in the center of Qilu land, facing the sea on both sides, with a unique natural environment and geographical advantages. The climate here is favorable and the wind is moderate, which provides good natural conditions for kite flying. Especially in spring, the wind and sunshine are a good time for kite flying. This unique natural ecological environment provides the necessary material foundation for the emergence and development of kite flying culture. The folk beliefs and customs of the Weifang area are closely connected with the kite culture. In ancient times, kites were regarded as mysterious tools capable of communicating with heaven and earth praying for blessings, and eliminating disasters. People prayed for good harvest, peace, and health by flying kites. This belief and custom has gradually evolved into a cultural tradition, making kites have a deep cultural heritage in Weifang. In addition, Weifang's literary and artistic works have also played a role in promoting the spread of kite culture. Kites have gradually become the theme of literature, poetry, painting, and other art forms, further enriching the cultural connotation of kites.

In the social life of the Weifang area, the kite is not only a kind of entertainment tool but also an important medium for people to socialize and communicate. Since ancient times, the kite flying activity of the Qingming Festival has provided a platform for people to gather and communicate and enhanced the communication and connection between people. Especially in traditional festivals or celebrations, kite flying has become a way of collective gathering, strengthening community cohesion and a sense of belonging. Kite flying is an important folklore activity in Weifang. It carries rich cultural connotations and folk customs, reflecting people's reverence for nature, love for life, and longing for a better future. Kite-flying has become a cultural symbol and folklore sign in Weifang.

With the continuous development of the political economy in the Weifang area, the kite industry is also growing gradually. Strong government support and market

promotion have made kites become a cultural card of Weifang. The rise of the kite industry not only drives the development of the local economy but also provides a strong material guarantee for the inheritance and development of kite culture. The relatively stable political environment in the history of Weifang provided the soil for the prosperity of culture. To maintain social stability and enhance the identity of folk culture, those in power would sometimes encourage and support some cultural activities with local characteristics. Kite flying as an activity integrating entertainment, culture, and art is easily recognized and promoted by the officials.

The Weifang area has developed handicrafts since ancient times, especially woodblock prints and kite-making techniques in Yangjiabu and other places. With the development of the commodity economy, these handicrafts have gradually become hot commodities in the market. As a unique handicraft, the production and sale of kites not only provided an economic source for residents but also gradually became an economic feature of Weifang. With the passage of history, different dynasties had different degrees of foreign exchange and openness. In certain periods, such as the Ming and Qing Dynasties, the Weifang area became an important window for exchanges due to the prosperity of its handicrafts and commerce. Such exchanges not only promoted economic prosperity, but also brought about cultural integration, and kites may have absorbed elements of multiple cultures in this process, gradually forming their characteristics. With the spread of kite culture and the increased demand for recreational activities, the market demand for kites gradually expanded. Businessmen saw the potential of the kite market and began to mass produce and sell kites. This commercialization drive led to further improvement and innovation in kite-making techniques. The emergence and development of kite culture are closely connected with social structure and social relations. As a social phenomenon, kite-flying activities reflect people's social needs, collective consciousness, and cultural identity. At the same time, the development of the kite industry also promotes the progress of the social economy and cultural exchange. To sum up, under the influence of multiple factors such as Weifang's unique natural ecological environment, cultural and humanistic environment, social life background as well as political and economic background, kite flying, as a kind of folk culture full of traditional culture and local labor wisdom, has been created and flourished.

Different geographical and natural ecological environments do produce different folk cultures. Differences in geography directly affect people's lifestyles and modes of thinking. Different lifestyles, in turn, affect people's values and worldviews, which are reflected in folk culture. Under the specific natural environment, people will form their unique understanding and perception of nature, which will be expressed through various forms of folk art. The natural ecological environment also affects the inheritance and development trajectory of folk culture. In areas with a relatively closed geographic environment, folk culture may be more conservative and traditional because the impact of external culture is smaller. In areas with an open geographic

environment and convenient transportation, folk culture may be more diverse and open because it is influenced by more external cultures. These different ways of inheritance and trajectories of development will make the folk culture in different places show diversified characteristics. Moreover, the relationship between the natural ecological environment and folk culture is not unidirectional, but interactive. On the one hand, the natural ecological environment shapes the folk culture; on the other hand, the folk culture reflects people's knowledge and attitude toward the natural ecological environment. This interaction makes a close connection between folk culture and the natural ecological environment. Different geographic and natural ecological environments produce different folk cultures, which is the result of a combination of factors such as geographic environments, lifestyles, art forms, inheritance methods, and people's knowledge of and attitudes toward nature. This diversity not only enriches the cultural heritage of mankind but also provides us with more diversified cultural perspectives and experiences.

Weifang kites have had special significance and made outstanding contributions to the region since ancient times. In Yangjiabu, kite-making is not only a traditional handicraft but also a means of earning a living handed down from generation to generation by residents. Historically, Yangjiabu residents have relied on their exquisite kite-making skills to bring a stable income to their families. This handicraft is not only a commodity, but also a bridge for them to communicate with the outside world, and through the sale of kites, they have established a wide range of contacts with the outside world. This not only creates jobs for residents but also provides them with a stable source of income and effectively improves the living standards of residents.

In addition, the kite industry has led to the development of related industrial chains, such as the supply of raw materials, processing and manufacturing, and sales. The development of these related industries further enriches the local economic structure and provides residents with more employment options and entrepreneurial opportunities. With time, Yangjiabu kites have gradually transformed from a mere cultural activity to an important economic industry. The production and sale of kites have created a large number of local employment opportunities and driven the development of a series of related industries such as raw material supply, processing and manufacturing, logistics and distribution, and marketing. Especially with the help of modern production technology, the output and quality of Yangjiabu kites have been significantly improved, further consolidating their position in the market and bringing considerable economic benefits to the local area.

In addition to economic contributions, Yangjiabu kites have also had an important impact on residents at the social and cultural levels. The inheritance and development of kite-making skills not only strengthen residents' sense of identity and pride in traditional culture but also promote communication and cooperation within

the community. Through joint participation in kite-making and flying activities, the community residents have become more closely connected, forming a unique community cultural atmosphere. As a local cultural symbol, Yangjiabu kites not only deepen residents' knowledge of and respect for traditional culture but also enhance their cultural self-confidence and sense of belonging. The inheritance and display of kite-making skills has become an important platform for community residents to communicate and interact, promoting social harmony and stability.

The popularity and uniqueness of Yangjiabu kites have also attracted a large number of tourists to visit and experience Weifang. This not only promotes the development of local tourism but also leads to the prosperity of hotels, restaurants, souvenirs, and other related industries. While enjoying the beauty and exquisite craftsmanship of kites, tourists also learn about the history, culture, and local customs of Weifang, which enhances the popularity and reputation of Weifang. As an important local way of production and life, Yangjiabu kites not only provide economic support for residents but also enrich their cultural life and enhance community cohesion. This perfect combination of traditional handicrafts and modern life demonstrates the unique charm and value of Yangjiabu kites.

Although Yangjiabu kites in Weifang, Shandong Province are an important local economic source and an important cultural folklore embodiment, with the changes in the natural environment and the development of economy and culture, Yangjiabu kites in Weifang, Shandong Province are in a difficult situation at present. Shandong Weifang Yangjiabu kites are famous for their unique artistic style and exquisite tying skills, however, in the modern market environment, their form as a tourist souvenir is relatively single, and the innovation is also insufficient. This problem is mainly reflected in the following aspects: serious product homogenization. Most of the Yangjiabu kite souvenirs on the market at present are traditional kite shapes and patterns, lacking novel design elements and personalized services. This homogenization phenomenon leads to a gradual decrease in consumers' interest in the products and also affects the market competitiveness of kites as tourism souvenirs. Lack of combination with modern aesthetics and practicality. Although the traditional Yangjiabu kites have high artistic value, they are not closely combined with modern aesthetics and practicality. In the fast-paced modern life, consumers are more inclined to buy souvenirs with both cultural value and practicality. However, in the current market of Yangjiabu kite souvenirs in this regard t, there is still a lot of room for improvement. Insufficient investment in innovation and R&D Since innovation requires a large amount of R&D costs and time, and the production and sales model of traditional kites is already relatively mature, many producers do not actively invest in innovation. This has led to slow progress in the development of new products that fail to meet the increasingly diversified needs of consumers. Focusing on reducing costs and increasing profits, the traditional craftsmanship, original symbolism, and cultural values of kites are lost. In the fierce market competition, to reduce costs and increase

profits, some producers may simplify the production process, use cheap materials, and even ignore the original symbolism and cultural value of kites. Although this practice may bring economic benefits in the short term, it damages the brand image and cultural heritage of Yangjiabu kites in the long term Craftsmanship Loss As for the loss of craftsmanship, the traditional craftsmanship of Yangjiabu kites is one of its core charms, which covers several links, such as tying, painting, decorating, etc., and each step requires exquisite skills and rich experience. However, with the advancement of modernization and the popularity of mechanized production, some producers have begun to use mechanized methods to make kites to reduce costs and increase production efficiency. While this method allows for the rapid mass production of kites, it cannot replicate the unique flavor of traditional handmade production. Mechanized kites often lack the agility and finesse of handicrafts and fail to reflect the unique beauty of traditional craftsmanship. This situation likewise adversely affects kite-related artwork. Yangjiabu kites are not just toys or handicrafts, they carry rich cultural connotations and historical information. Yangjiabu kite artwork is not just a toy or decoration, but also a carrier of culture. However, in the pursuit of profits, some producers may neglect the original symbolism and cultural connotations of kites, leading to the gradual loss of these valuable cultural heritages and the loss and disconnection of traditional culture.

Modern Shandong Weifang Yangjiabu kites are facing the dilemma and difficulty of a single form of related art products, insufficient innovation, and loss of traditional crafts and cultural values. To solve these problems, producers need to increase their investment in innovation research, and development, and develop new products with modern aesthetics and practicality; at the same time, we also need to pay attention to the protection of traditional crafts and cultural values, we need to strengthen the inheritance and protection of traditional crafts and cultivate more craftsmen; at the same time, we also need to deeply excavate and pass on the cultural connotations of kites, to let more people understand and appreciate the unique charms of the kites in Yangjiabu. to maintain the brand image and cultural heritage of Yangjiabu kites. The government and related organizations should also give policy support and financial support to promote the innovative development and cultural inheritance of the Yangjiabu kite industry.

With the change of the times and the development of society, Weifang Yangjiabu kites, as a form of traditional culture and art, are indeed facing the influence of many factors, which require them to be constantly innovated and developed, to take on new social responsibilities, to integrate into new cultures as well as to conform to the new needs of the society. Under the background of globalization, various cultural exchanges are becoming more and more frequent, and Weifang Yangjiabu kites are also inevitably influenced by other cultural elements. The integration of new cultural elements not only provides more sources of inspiration for kite-related design products but also makes them richer and more diversified. In addition to society's

increasing concern for environmental protection and sustainable development, Weifang Yangjiabu kite-making also needs to take on new social responsibilities. This requires kite makers to pay more attention to environmental protection and sustainability in the selection of materials and production process. The development of the market economy has put forward new challenges and opportunities for the Weifang Yangjiabu kite industry. To adapt to the market competition, kite makers need to keep innovating and develop more characteristic and competitive products. At the same time, they also need to pay attention to the changes in consumers' demands and adjust their product strategies in time to meet the diversified demands of the market. As the function of kite-related design works is changing, not only for flying, but also need to have home decoration, cultural communication, cultural and tourism products, and other aspects of the demand, the product design and production needs to be combined with the new demand for corresponding debugging to meet the current lifestyle, for example, can be developed for the different consumer demand for the launch of customized services, to meet the customer's personalized needs. In addition, the aesthetic concept of contemporary society is constantly changing, which puts forward new requirements on the aesthetic value of Weifang Yangjiabu kite products. Modern people pay more attention to the aesthetics and artistry of kites while pursuing their practicality and fun. Therefore, designers need to inject modern aesthetic elements, such as clean lines and bright colors, based on maintaining traditional craftsmanship to meet the aesthetic demands of modern people.

In summary, due to various factors such as the integration of new culture, the emergence of new social responsibilities, new economic operation methods, new lifestyles, and new aesthetic standards, Weifang Yangjiabu kites do need innovation and development. This not only helps to inherit and promote traditional kite culture but also enables it to better adapt to the needs and value changes of modern society. It is precisely based on the above thinking and attention to the folk culture of Weifang kites that I have chosen the topic of "Social Life and Local Wisdom to Creative Kite Arts in Yangjiabu, Weifang, Shandong Province, China in the Cultural Ecology Perspective", to explore the protection, development, innovation, and reuse of traditional folk culture while studying Weifang kite folk culture.

1.2 Research Objectives

This study has 3 main research objectives.

a) To study the natural geographic environment, historical development background, types of craftsmanship, and local wisdom of Yangjiabu kites in Weifang, China;

b) To study the social life of Yangjiabu kite art in Weifang, China, and the relationship and influence with the local economy, politics, and culture;

c) To study the current situation of the development of Yangjiabu kite artwork

in Weifang, China, and to carry out design practice, to explore the cultural innovation development path of traditional folk art, and to provide theoretical research samples for the ecological development of traditional folk art.

1.3 Research Question

Utilizing a combination of social history data and ethnographic fieldwork, this study combines the Weifang kites with Western sociological theoretical paradigms and focuses on the following questions:

a) What are the shapes, colors, structures, geographic environments, and historical development of kites in Weifang, Shandong?

b) Under the cultural ecological perspective, what is the process of generating the cultural value chain of Weifang kites and how does it function and change in local politics, economy, history, folk art, culture, social roles, and social life?

c) How did the Weifang Yangjiabu Kite Folk Art develop from a folk custom to an internationalized festival, and explore how to develop and innovate in the ever-changing cultural ecological environment and cultural value chain?

1.4 Definition of Terms

1.4.1 Weifang Kites in This Study

On the material level, local Weifang kites include physical kites, kite-making craft materials, implements, and all kinds of literature and historical materials related to Weifang kites. On the spiritual level, Weifang kite culture includes customs and allegorical symbols related to Weifang kites; in addition, to various social activities related to Weifang kites.

1.4.2 Weifang Yangjiabu

In this study, the term refers to Yangjiabu, one of the birthplaces of kites in Weifang, which belongs to the Hanting District of Weifang City, Shandong Province.

1.4.3 Weifang Yangjiabu Kite Art

Weifang kites have a strong local life flavor and vivid charm, which is one of the intangible cultural heritages of Weifang, Shandong Province, traditional handicraft treasures, folk traditional festivals, and cultural practices. After a long period of development and innovation, Weifang kites have gradually formed unique artistic characteristics and styles. With its peculiar choice of materials, exaggerated and

deformed design, brushwork techniques of painters, and ingenious use of mechanics in flying, it has formed a strong local characteristic and unique artistic aesthetic value and is an important cultural symbol of the city as well as an important sign of distinguishing from each other.

1.4.4 Shandong Weifang Yangjiabu Kite Heirloom

In this study, the term refers to people as well as families who have passed down the art of kite making for generations in Yangjiabu, Weifang, Shandong Province, and with the prosperity of the modern kite industry, some of the heirs have evolved into workshop owners or non-genetic inheritors.

1.4.5 Cultural Ecology

Cultural ecology in this study refers to the ecological environment jointly constituted by the intrinsic and extrinsic elements on which the Weifang kite culture relies for its existence and development, and it is the sum of the various conditions under which the Weifang kite arises and develops.

1.4.6 Social Life

Social life refers to the living system of human society, the general term for the daily life of society outside the field of material production activities and public activities of social organizations, which in this study mainly refers to the formation of a series of complex, multi-level social phenomena under the comprehensive effect of economic, political, cultural, psychological, and environmental factors in the society of Weifang Yangjiabu kites.

1.4.7 Cultural Value Chain

The cultural value chain involves all links and components of the cultural industry, relates to the association and interaction between the links and components of the cultural industry and with other industries, and is the process of value creation and distribution of the cultural industry. The cultural industry is not isolated, it has close connections with other industries such as tourism, education, science and technology, etc. The association and interaction between these industries can form a longer industrial chain and a bigger industrial cluster, thus promoting the development of the whole economy and society.

1.4.8 Cultural Innovation

Cultural innovation is based on the social practice of new situations that constantly appear, and raise new questions, the need for cultural innovation to adapt to

new situations, and answer new questions, is the inevitable requirement of the development of social practice, is the internal power of the development of culture itself, cultural innovation can promote the development of social practice. This study mainly refers to the development and innovation of the traditional culture of kite flying in Yangjiabu, Weifang, to better adapt to the new environment of the times across the aesthetic generation gap, to further enhance the sense of identity of the younger generation, tourists and investors, and to explore the innovation path of traditional culture.

1.5 Scope of Research

1.5.1 Field of Research

1.5.1.1 Main study sites

Yangjiabu, Hanting District, Weifang City, Shandong Province, China. Historically, the northern part of Hanting in the Weifang area has a large saline and alkaline mudflat land, which is a natural place for kite flying and is also the birthplace of Weifang kites.

1.5.1.2 Research location

（a）Weifang, Shandong Province, China

Weifang, anciently known as Weizhou and Weixian, alias Kite Capital, Weifang City is an important kite-making base in Shandong Province, Weifang is situated in a geographic location that has been very important in China's economy and culture from the ancient time of Dayu to the present. Theoretically speaking, Weifang kite culture should be nourished by both marine culture and inland culture, so the cultural heritage is quite deep.

(b) Jinan, Shandong Province, China

Jinan is the capital of Shandong Province

(c) Wangjiazhuangzi Village, Weifang City, Shandong Province

Important Modern Workshop of Kites in Weifang, Shandong Province

1.5.2 Timing Scope

1.5.2.1 Research learning cycle

(1) In 1043-255 B.C., Mo Zhai, a great thinker of the State of Lu, made the first "wooden kite";

(2) 618-1279 A.D., Tang, and Song Dynasties, Weifang kite sport grew and developed well under the historical background of that time.

(2) 1368-1644 AD, Ming Dynasty, Weifang kites went to the folk and began to rise;

(3) 1644-1840, Qing Dynasty, with the popularity of kite-flying custom, folk artists specialized in kite-making began to appear in Weifang, and the art of Weifang kites also reached its heyday;

(4) 1840-1912, the end of the Qing Dynasty, Weifang has formed a fixed kite market;

(5) In modern times, Weifang has become a famous kite-producing area and market gathering place at home and abroad;

(6) With the establishment of new China, the Weifang kite served as the symbol of Weifang city;

(7) In 1984, the Chinese government attached great importance to the protection and development of folk cultural heritage, and the International Kite Festival was successfully held in Weifang;

(8) In 1988, Weifang was chosen as the "World Kite Capital" by the domestic and foreign kite flying circles.

1.5.2.2 Years of field work:2021-2023

1.5.3 Research Unit of Analysis

Taking Shandong Weifang kites as a case study of kite craftsmanship, historical narratives, concepts contained in kites, as well as the commercial development of kites and the operation and management of the cultural value chain, it explores the close relationship between kite culture and the life of the common people, explores the humanistic value and folkloric function of kites in the modern society as well as the cultural value chain formed to carry out exploratory research and studies to reveal the role and status of the folkloric Weifang kites in the material and spiritual life of the people of Weifang in Shandong Province as well as to understand the value attributes of the potential commercial development of the kites in Yangjiabu and carry out the attempted practice of cultural innovativeness.

1.6 Research Methodology

The study adopted a "qualitative research methodology". The methodology is structured as follows:

1.6.1 Research Populations

1.6.1.1 Local people in Yangjiabu, Weifang, Shandong Province

(1) residents of Yangjiabu, Weifang, Shandong Province

This is an important folk force that witnesses participates in, and inherits the development of the Weifang kite culture. They are the pro-lifers of Weifang kite culture. As of 2021, there are more than 1,000 households and 3,000 people in Yangjiabu.

(2) Handmade kites in Yangjiabu, Weifang, Shandong Province

Shandong Weifang Yangjiabu kite handmakers play a vital role in the production of kites in Weifang. Most of the employees have inherited the work of their ancestors who have been making kites for generations to pass on the kite culture.

(3) Kite Merchants in Weifang, Shandong Province

With the development of the kite industry in Weifang, some locals are good at seizing business opportunities and actively open kite stores and handmade experience workshops, etc., which not only serve tourists but also increase their income.

1.6.1.2 Outside staff

(1) Tourists

Tourists here are visiting the world cultural heritage of kite culture in Yangjiabu, Weifang. Here they can get various forms of cultural tourism, including experiencing the process of Weifang kite making.

(2) Researchers

They are the main force in studying Weifang kite culture and digging deeper into the essence of Weifang kite culture. They can be teachers, researchers, retirees, and so on. They search for literature with unique perspectives, record relevant information, and display and promote Weifang kite culture.

(3) Collectors

Weifang kites have a high collection value. Depending on when the kites are made and the production process, the collection value will change. Many people collect Weifang kites, and the purpose and style of collecting kites are different.

(4) Merchants

With the development of the commodity economy and the rise of the economic value of Weifang Yangjiabu kites, there are a large number of merchants engaged in

commercial activities such as the production and sale of Weifang kites, to gain income and also promote the dissemination of Weifang kite culture.

(5) Government Personnel

Government personnel come here to make field visits and make suggestions for local development.

1.6.2 Instrumentation for Data Collection

Cameras, laptops, camcorders, pens, computers, pads, etc.

1.6.3 Data Collection

Literature review as well as data collection were conducted mainly through on-site research as well as literature such as research articles, magazines, and local government documents.

1.6.3.1 Fieldwork

(1) Interviews: formal interviews, informal interviews, focus group interviews, in-depth interviews, and general interviews.

(2) Observation: general and participatory observation.

1.6.3.2 Documentation data collection

Determine what data needs to be collected based on the purpose and questions of the study. Data can come from a variety of sources such as reviewing literature, local government documentaries, research, surveys, public databases, etc.

1.6.4 Data Analysis

Qualitative Research Methods. I used the research framework as an introductory categorization tool to organize and synthesize the data while collecting it. Pre-processing of the collected data includes removing duplicates, dealing with missing data, anomalies, etc. The purpose of data cleaning is to improve the quality and accuracy of the data and to lay the foundation for subsequent data analysis. After that, I will organize the data information in detail according to the outline of each chapter in the research paper, and then describe the analysis with the research concepts.

1.6.5 Research Practice

The research is based on theoretical research, an interdisciplinary approach, and a client-centered methodology, and adopts a "principle-driven" strategy as the main guiding principle for research practice. Participatory Action Research (PAR) was used

as the research methodology, emphasizing the importance of collaboration between stakeholders and the research team. The research methodology included site visits, SWOT analysis, focus groups, and questionnaires. Data from all previously described research methods were obtained and analyzed qualitatively.

1.6.6 Research Presentation

（1） Thesis: descriptive analysis and pictures and practice.

（2） Research articles: "scopes" published at the level of international journals.

1.7 Literature Review

1.7.1 Literature Review on Research Text

To make this study go smoothly, a series of academic documents on "Weifang Kites of China" have been collected, studied, and analyzed.

From the preliminary literature collection, there are many monographs and collections of essays on kite research. The Learning of Kites is a collection of essays, the contents of which mainly focus on the introduction to the history of kites, the artistic characteristics of kites, the production process of kites, and the regional characteristics of kites and New Year paintings. In Exploring the History of Kites, Wang Jinlong explores the history of kites and their laws, linking kites with socio-political, economic, and cultural customs, and continuing chronologically from the "wooden luan" of the Spring and Autumn Period and the Warring States Period to the commercialization of kites in the century. The Complete Book of Kite Tying Techniques introduces a variety of kite forms, both ancient and modern, from five aspects: tools, materials, and methods, traditional kite tying, new kite tying, modern kite tying, and flying techniques. The other books, without exception, focus their analysis and research on the origin of kites, the craft and process of kite making, kite flying, and the artistic characteristics of kites, and as a whole show us the basic knowledge about kites. Most of these works are written in great detail and are of great help to kite-making techniques and flying skills, but they treat kites as mere "dead" artifacts rather than as living "things" to be studied. In this part of the work, there is the phenomenon of repeating the existing kite materials, and the innovation and in-depth research are not enough, but the detailed information is very helpful for the construction of theoretical models and subsequent in-depth research, and it is an important prerequisite and foundation for the theoretical processing and upgrading.

In terms of dissertations and journal papers, the academic and theoretical nature of research on kites has improved in comparison. Some of them analyze the development status of kites in China as a whole, and Zhang Yijun analyzes the genres and characteristics of Chinese traditional kites and points out the changes and

significance of traditional kites in "The Genre and Flux of Chinese Traditional Kites", and introduces the theories of intangible cultural heritage protection into the inheritance and protection of kites. Some research from the aspect of arts and crafts, Li Qi in "On the Modeling and Artistic Characteristics of Weifang Kites" discusses the origin of kites, the development history of kites, the production techniques of kites, and the modeling and artistic characteristics of kites. Xie Jie in "Historical Examination of Weifang Kite Craft Inheritance" focuses on the influence of the local natural environment, economic development, and social culture on kites in Weifang, and analyzes the craft inheritance of Weifang kites in detail. Wang Wen in "The Necessity of Protecting Intangible Cultural Heritage from the Art of Kites" conducts a theoretical study on the Chinese five-color system, semiotic theory, and stylistic systematics by examining the current living and working environments of folk artists. Some research is from the aspect of regionalized characteristics and folklore. In "Research on Weifang Folk Art under the Perspective of Regional Culture", Li Junfeng links the traditional folk art of Weifang, such as kites and New Year's Paintings, with the regional culture, to fundamentally explore the reasons for the emergence and development of the traditional folk art. Liu Qiuzhi, in "Kites and the Life of the Common People: Weifang Kites as a Case Study", puts forward the role and position of kite folklore in the people's material life and spiritual culture, and seeks the common development between economic development and folklore culture.

In his article "The Origin and Development of Weifang International Kite Flying Association", Jiang Luchuan analyzes the three stages of development experienced by the International Kite Flying Association: the initial stage of conception, the stage of wandering and turning, and the stage of innovation and development, and reveals the transmutations experienced by the government in this process of change. Some of them start from engineering to conduct quantitative analysis. Li Feng, in his article "Survey on the Current Situation of Kite Flying Activities of People Involved in Kite Flying in Weifang City", focuses his research on the masses involved in kite flying activities, and based on which he analyzes the gender differences in kite flying activities, places of activities, seasons of kite consuming, and types of kites, and so on. In "The Historical Inheritance of Kite Art in Weifang", Mengna chronologically describes the three stages of kite art traditions in the late Qing Dynasty, mid-Republic of China, and the New China period, and focuses on the mythological origins and historical development of kites, and it is worth noting that the author proposes that "kites originated from the streamers". Li Zaiquan, in his article "Kites and Witchcraft", puts forward two types of kites in their original form, one is the "wooden luan"; the other is the "prophecy"[13] kite. The origin of kites is traced back to witchcraft, which is a tool for communication between humans and gods. It can be said that the study of mythological society or mythological thinking about kites has hardly been discussed in previous kite studies, which is what this study will focus on.

13 The original meaning of prophecy refers to prophecies and omens that can be fulfilled in the future. It is an ancient book about prophecies and omens that promote superstition.

In addition to this, Yangjiabu's natural geography, disasters, culture and art, and religious beliefs are also essential variable factors in the overall study. These elements related to them can be found in books such as Weixian Zhi (Weixian Zhi), which was revised in the 25th year of the Qianlong14 Emperor in the Qing Dynasty, Hanting Folk Literature Integration, Weifang Culture Zhi (Weifang Cultural Zhi), Hanting Literary and Historical Dazhan (Hanting Cultural and Historical Dazhan), Hanting District Zhi (Hanting District Zhi), and Watching the Spiritual Home, etc., and this aspect of the material provides sufficient material for us to analyze the kites from the framework of the overall study. The above literature has made a lot of useful discussions on the history of kites, kite production, flying skills, kite performance, and kite literature management, and has done a lot of work on the collection and organization of various kite pictures, but it has not paid enough attention to the economic and cultural value of kites in Weifang, their operation and management as well as their cultural innovation. To solve the most crucial cultural innovation problem, the heritage and cultural innovation of local folk art and culture should be observed and analyzed from a comprehensive and developmental perspective, but the researchers in the field of local folk art and culture research and product design and development usually pay more attention to the artistic characteristics of folk art and culture and conduct more in-depth researches on the materials, techniques, and crafts, but they are often used only as the "static and simple" kites. But often only as a "static and simple" crafts, not as a vitality, in the process of development of "things" to study, and did not put the folk art and culture into the entire chain of cultural values to observe, discuss its development and management, did not study and understand the folk art and culture in the cultural value chain. Not studying and understanding the geography, history, humanities, economy, management, and other comprehensive elements of folk art and culture in the process of occurrence and development, may lead to the folk art and culture not being fully recognized and utilized, and can not be its cultural value and identity attributes fully into the design works. In recent years, with the development of various disciplines, interdisciplinary research has gradually become a trend, so it is meaningful and useful to study the occurrence and development process of folk art and culture from the perspective of the management of a historical and comprehensive cultural value chain.

The meanings that people give to things necessarily derive from human transactions and motivations, especially the way these things are used and circulated. As Arjun Appadurai. (1988-1-29) writes in The Social Life of Things. Beneath the infinity of human desires and the apparent diversity of material forms, there are complex but specific social and political mechanisms that regulate tastes, trade, and desires. (Arjun, 1988)

---

14 Qianlong , was the reign name of Emperor Aisin Gioro Hongli of the Qing Dynasty. It lasted for sixty years, starting and ending from February 12, 1736 to February 8, 1796, before and after.

(Porter, 1985) Michael Porter first used the concept of the value chain. The value chain is a systematic approach to analyzing the increase in competitive advantage. The value chain of a firm or industry is embedded in a larger stream of activities, which is called a value system. Gaining sustained competitive advantage depends not only on the value chain of a company or firm but also on how that company fits into the overall value system. Processes, including production and consumption, consist of interlinked activities. The concept of "chain" suggests that these activities are integrated. Porter's framework of the value chain is very useful for firms in their competitive analysis and strategy development.

The term value chain was used as an improvement methodology by planning analysts in the mining export economy in the 1960s and 1970s. (Girvan, 1987) In French planning literature, the term "filiére" was used to describe the need for French industrial capacity across the entire value chain. (Kaplinsky, 2010) In 1985, Michael Porter used the term value chain in his book Competitive Advantage. He mentioned how value chains are created in an organization and used the term on the topic of global competitive strategy and production costs. (Özdogan, 2009) The value chain has been used in both theory and organizations. Over the years, the model has been widely used by researchers and academics to identify key linkages in operations and to develop strategic plans for organizations. (Kaplinsky and Morris, Communicating the Gains of Globalization: What Can Be Learned from Value Chain Analysis, 2000) This study has advanced research on the development of value chains and laid the foundation for interdisciplinary research.

(ZhangAnxin, 2012) The framework of Porter's value chain (1985) is very useful for manufacturing firms to conduct competitive analysis and develop strategies. However, cultural products have a strong symbolic value, which is determined by the social and cultural significance associated with them, allowing consumers to express their personal and social identities through the purchase and use of the product, which should be based on the value chain of the model study of the development of cultural and creative industries. In recent years, cultural and creative industries have played an important role in many national development policies, how these value-added activities work remains unclear (Eickhoff and Haunschild, 2007) and the value chain model was initially developed from a manufacturing environment (Porter, 1985), therefore the objective of this research is to further understand how the value chain of the cultural products industry serves the consumers, and the relevant beneficiaries, as well as operators, can use the research to build sustainable competitive advantage.

In addition, some scholars (Wangwen, 2010; Liu Qiuzhi, 2005) have studied and explored the historical development law of folklore, emphasized the influence of the local native natural environment, economic development, and social culture on folklore, sought the co-development relationship between economic development, cultural value chain, and folklore culture, and described the process of the emergence

and development of folklore commodification as well as the management process. In addition, it analyzes the three stages of development experienced by the Weifang International Kite Festival: the initial stage of conception, the wandering and turning stage, and the stage of innovation and development, and reveals the transmutation of the roles and functions of the government and the relevant personnel in this process of change (Jiang Luchuan, 2009). Social capital theory is combined with value chain analysis and management to realize the value of SDGs in the region as much as possible. This capital power is very important for the formation of local sustainable development. However, this abstract concept needs to be translated into more practical and simple steps to be realized by all stakeholders. This vacuum is then realized through the concept of the value chain. This concept can be used as a way to embrace every member of the community, government, and industry. Value chain support activities demonstrate the design and consensus of social, cultural, and environmental capital (Dave et al., 2020). The concept of value chain analysis is used as a basis of discussion for marketing modeling and research while focusing on the impact of festivals on the value chain as well as marketing (Andreja & Slobodan, 2019).

The value chain consists of all the activities required to take a product from its conception, through the different stages of production development, to its final customer. The value chain approach helps to increase the overall productivity of an industry (Teshome Kassahun, 2015). At the same time, some studies show that tourism is an evolving industry with global competition, so there is a need to define the service concept of the value chain in the strategic management process to develop service-based value chain applications. Therefore it is necessary to define the value chain of tourism by analyzing the model of adaptation of sectoral value chains to the tourism industry. Tourism is a sector that produces complex products, integration, and its subsectors are extremely interdependent. To conduct a value chain analysis of the tourism industry, it is necessary to study all the players operating in this sector. An in-depth study of the relevant operations in the value chain exposes the relationships and linkages between these operations, which can predict trends or expose additional opportunities for developmental innovations for the beneficiaries involved (Bilgen Mete and Elif Acuner, 2014). Studying the operations of the value chain as well as the management model can help to improve adaptability as well as to develop cultural innovations for sustainability (Jakobus Smit, 2015).

1.7.2 Literature Review of Research Concept

1.7.2.1 Social life

Human societal activities as well as practices result in interactions and relational descriptions of objects, that is, the meanings that people assign to things necessarily derive from transactions and motives among human societies, which include complex

but specific social and political mechanisms that exist, and the social life of such things shows a marked diversity.

1.7.2.2 Cultural innovation

It refers to the innovation and improvement of existing cultural contents, forms, and modes of dissemination in the field of culture with the help of scientific and technological means or other new concepts, ways of thinking, and means, to satisfy people's ever-increasing spiritual and cultural needs and to promote the development and progress of culture. This concept was first put forward by the Austrian economist Joseph Schumpeter, who emphasized the importance of innovation for economic development in his economic theories, and introduced the concept of "innovation" into the cultural field in his subsequent research, thus forming the concept of "cultural innovation". The concept of "cultural innovation" was formed.

1.7.3 Literature Review of Research Model

Up to now, there has been no theoretical research and practice on Yangjiabu kites in Weifang, Shandong Province to use the two concepts of social life as well as cultural value under the perspective of cultural ecology.

1.8 Concept, Theory, and Conceptual Framework

1.8.1 Concepts and Arguments of This Research

The main concepts of this study are social life and cultural innovation. This study examines the folk thing of kites in Yangjiabu, Weifang, Shandong Province from the perspective of social life under the threshold of cultural ecology, and then explores the path of cultural innovation of the traditional art of kites in Weifang, Shandong Province.

Cultural ecology: the reason why kites were invented and developed based on cultural evolution is the main means and way for human beings to adapt to the surrounding environment, and it is also the result of human beings' choices to adapt to the population pressure, the pressure of the natural environment, and the level of technological development and so on. Therefore, the characteristics of kites can only be understood and explained if they are closely related to their ecological environment, by examining the ecosystems in which human beings live.

Physical social life: This study focuses on the living system of human society related to the kites in Yangjiabu, Weifang, Shandong Province, which mainly includes material life activities, social daily activities, economic activities, political life, and other multi-level and intertwined material and economic activities.

Cultural innovation: this study explores and researches the development process, craft materials, local wisdom, social relations, consumption activities, and other activities of kite art in Yangjiabu, Weifang, Shandong Province, under the perspective of cultural ecology, and at the same time, it studies the interaction between the current traditional culture of kites and the modern economic and social societies and tries to develop based on inheritance, exploring how to integrate the traditional culture of kites with the life of the modern society in a better way, and how to carry out cultural innovation of kite art, reducing the interactions between tradition and modernity, and reducing the cultural innovation of kites. cultural innovation, reduce the aesthetic generation gap between tradition and modernity, enhance the sense of identity of tourists as well as investors, and explore the innovative path of traditional culture.

1.8.2 Research Conceptual Framework

The framework of this study is based on the study of kites in Yangjiabu, Weifang City, Shandong Province. Taking social life and cultural innovation as the research concepts, this study will take Yangjiabu, Weifang City, as the basic field site to systematically interpret the traditional kite crafts, the historical narratives, and the concepts contained in kites in Weifang. We will explore the historical development of kites as "objects" and their relationship with the local social structure and cultural concepts. By studying the social life, commercialization process, and technological development of Weifang kites, it is possible to study the geographical, political, historical, intellectual, technological, and symbolic changes of the Weifang kites, which are a folk culture with a long history, and how they have generated and formed a cultural value chain, and at the same time analyze the correlation between them, to deepen the cognition of the influence of the folk culture on the human society.

Based on literature and theoretical research results, this study will combine the theory of cultural ecology with cultural ecosystem analysis to describe the ecological pattern of China's natural ecological environment and kite culture, and along the development trajectory of China's kite culture, to scrutinize the skills and development of Yangjiabu kites from an ecological perspective. Statically, we summarize the production techniques of Yangjiabu kites and find out the best way to protect the ontology of Yangjiabu kites; dynamically, we analyze the relationship between the development of Yangjiabu kites and the natural environment, the economic environment, and the social system, and we analyze the imbalance of ecological position of the intangible cultural heritage of Yangjiabu kites and countermeasures, and we analyze the process of folk art and culture, the opportunities and challenges, and predict the direction of development, with the main line of the development of cultural value chain, trying to attempt to carry out a comprehensive analysis. The development process, opportunities, and challenges of folk art and culture are analyzed and researched with the development of the cultural value chain as the main line, and the direction of development is predicted. It tries to carry out the

inheritance and innovation of the traditional culture of kite art, explores the paths and ideas for the protection and inheritance of Weifang kite culture, explores the new way of integrating the traditional culture with the modern one, and injects the new factors and methods of expression into a traditional culture. Finally, it puts forward the thoughts and suggestions on the ecological development of the Yangjiabu kite industry to provide decision-making references and development suggestions for the local government, related enterprises, and other departments, and to provide theoretical research samples for the ecological development of modern traditional arts.

1.9 Section Structure

Chapter 1 Research Overview

Chapter 2 The Physical Space and Development of Kites in Yangjiabu, Weifang, Shandong Province

Chapter 3 Social Life and Cultural Ecology of Yangjiabu Kites in Weifang, Shandong Province

Chapter 4 Traditional Folk Art Cultural Value Chain Management and Cultural Innovation Formed in the Balance of Cultural Ecology

Chapter 5 Innovative Design of Yangjiabu Kites in Weifang, Shandong Province

Chapter 6 Research Summary, Discussion and Recommendations

1.10 Benefits of Research

(1) As a product of localization, Weifang kites are closely related to the history, society, and culture of the Weifang area. The author will explore the historical development of kites as "objects" through field research methods and social history data, and at the same time, investigate the natural environment, humanistic environment, production materials, and technological genres of the Weifang kite from the perspective of cultural ecology, The study will also investigate the natural environment, humanistic environment, production materials, technical genres, modeling structures of Weifang kites in the context of cultural ecology.

(2) To study the cultural value of kite folk art in Yangjiabu, Weifang, Shandong Province, China, as well as the process and reasons for how folk activities become internationalized festivals, and to explore the process of the development of folk art culture and the value chain.

(3) By observing and analyzing the conditions of the art and culture value chain, the operation process, and management changes, the study tries to predict the trend and dynamics of cultural and art product innovation based on the content of the study, to help stakeholders explore and develop cultural innovation product design, and to

design and update the innovation strategy through the feedbacks from the consumers and stakeholders, to carry out the exploration and practice of the development and innovation paths of the traditional Weifang kite culture in a sustainable way. Exploration and practice of development and innovation path.

พหูนํ ปณฺฑิโต ชีเว

CHAPTER II

Enhancing Kite Development in Yangjiabu, Weifang, Shandong, China

2.1 Introduction

The content of this chapter is to elaborate on the physical environment, the historical origin of the development, the inheritance method, and the local wisdom of kites in Yangjiabu, Weifang, Shandong Province are sorted out and researched, which can lay the foundation for the research in Chapter Three and Chapter Four. In this chapter,r I divide into four subsections for research and discussion. The first subsection introduces an overview of cultural ecology; the second subsection introduces the reasons for the generation of Yangjiabu kites in Weifang, Shandong; the third subsection introduces the local wisdom of Yangjiabu kites in Weifang, Shandong, and its relationship with other folk cultures; and the fourth subsection introduces the development of Yangjiabu kites in Weifang in the modern era.

2.2 Cultural Ecology Overview

Ecology is the science of the interrelationships between organisms and their environments and the mechanisms of their interactions. The word "Ecology" was formed in 1866 by Leret by combining two Greek words (house, residence) and (discipline). 1866, the German zoologist Haeckel first defined ecology as "the science of the interrelationships between animals and their organic and inorganic environments", which emphasized the study of the interests and relationships between plants and animals in the natural world, especially in the biosphere, and thus opened the way for the development of ecology. The discipline emphasizes the study of the natural world, especially in the biosphere, the relationship between plants and animals, and from then on, opened the prelude to the development of ecology. Cultural ecology takes the interrelationship between the regional environment and distinctive culture as a breakthrough to study the emergence, development,ment, and mutation of culture. Any kind of human cultural form will always have material, information, energy exchange, and mutual influence with the environment it exists, and the time consumed by this influence is often long and long-lasting, once formed, it will have a relatively long-lasting eternity (Liu, 2016; TIAN, 2011).

Cultural ecology is a discipline that studies the space, resources, laws, and environment of human cultural development. One of the characteristics that distinguishes it from natural ecology is that cultural ecology places special emphasis on the specificity and complexity of human society, focuses on the multiple factors of human survival, and systematically synthesizes and summarizes them; cultural

ecology mainly studies the origin, development, and relationship between human culture and the natural world from a humanistic perspective. One of the cores of cultural ecology is to emphasize the territorial construction of culture, which encompasses everything of human civilization. Cultural ecology believes that the differences between cultures mainly refer to the differences in the process of adaptation of different social groups to different territorial environments and that different types of ecological environments determine different cultural contexts of human beings. Julian Steward, a famous American anthropologist, and advocate of cultural ecology and new evolutionary theory, analyzes the mode of "environment - technology - behavior - conceptual form", that is to say, the environment influences the technology, the technology influences the behavior, and the behavior influences the conceptual form (Yin, 2013; Zou, 2021).

A natural ecosystem is an ecosystem that is more stable and able to rely on its biosphere cycle to maintain its functioning, such as oceans and grasslands. This concept was first proposed by the British ecologist Tansley in 1935, and since then the theory of natural ecosystems has entered the world of human cognition and matured. Since culture is a kind of system organized according to the corresponding principles and laws, it is similar to the natural ecosystem in many aspects, and they are both self-organized and ecological to a certain extent, so many scholars have also included the cultural ecosystem in the study of ecology. Cultural ecosystem in many quantities, a cultural ecosystem with the natural environment is the nearest and most direct science and technology, a little far away is the economic system and social organization, and the farthest position is people's values.

There are also obvious differences within the cultural ecosystem, with different types of ecological environments forming diversified cultural communities and cultural circles, which together constitute the overall cultural ecosystem of mankind. For example, in China, traditional martial arts are divided into two schools, one in the north and the other in the south, and the other in the south is subdivided into more types of schools, "styles", "routines", and "schools", which are mostly rooted in the traditional Chinese vernacular society. Most of these contents and forms are rooted in the traditional Chinese vernacular society, based on "villages", passed down from generation to generation, and developed and expanded, such as Chen's Taijiquan in Chenjiagou, Wen County, Jiaozuo, Henan Province, Baojiaquan in BaoTun, Daxiqiao, Anshun, Guizhou Province, and Wing Chun, Foshan, Guangdong Province, and so on, which formed a group of unique Kungfu culture communities. In terms of folklore, the Qingming Festival of the Xibo fish[15] is completely different from that of the Han Chinese[16], and the Tibetan New Year is different from that of the Han Chinese Spring Festival. From the beliefs, only in Qinghai Province, for example, there are three

[15] Qingming Festival is usually celebrated once in March of the lunar calendar, but the Xibe people in Ili and Tacheng areas of Xinjiang have to celebrate the Qingming Festival twice a year in March and July of the lunar calendar. During the festival, people use fish and melons to offer sacrifices, so they are called Fish Qingming and Melon Qingming respectively.

[16] The Han Chinese are the main ethnic group in China.

cultural circles distributed Tibetan Buddhism, Islam, and Han Taoism. From the perspective of traditional industries, there are three cultural circles, namely, the one based on farming, the one based on fishing and hunting, and the one based on pastoralism, and so on. Therefore, it is of great significance to use the theory of cultural ecology to guide the rescue, protection, and development of intangible cultural heritage (Yang & Sun, 2020).

Cultural ecology is non-renewable. Non-renewability means that once destroyed by external forces, it cannot be restored, and once these historical civilization crystals are destroyed, they will produce irreversible and serious consequences, which is a great loss in the history of human cultural development, therefore, we must not engage in the construction of cultural ecology by "tearing down and reconstructing later". Cultural ecology is a unique product of human society, and is a product of culture after a long period of accumulation and evolution, at the same time, ecological culture also has a historical and temporal, it is accompanied by the historical process of economic and social development of the formation of new cultural forms.

Culture is one of the basic issues of sociology and other humanities research. Culture has ethnicity, which is because culture, as a unique social phenomenon of human beings, is bound to contain higher social and spiritual factors at the beginning of its birth, and the social ideology of the human nation is diversified and developing, which inevitably leads to the pluralism and ethnicity of culture.

Therefore, culture is not only influenced by the natural and economic environment but also by the social environment, which forms a composite social structure of the natural-economic-social trinity. The development of cultural ecology has continuity and historical inheritance. Once a cultural ecology is established and developed, it will maintain long-term stability and inheritance. Taking kites as an example, kite cultural ecology refers to the unity of material and spiritual carriers related to kite culture. Historical symbols of kites such as patterns, technology, cultural language, and so on retain the characteristics of thousands of years ago to a certain extent while absorbing various cultures to enrich themselves and form themselves, integrating, forming new cultural characteristics and cultural temperament and being inherited, reflecting the continuity and historical inheritance of the development of cultural ecology position. The main goal of cultural ecology research is to explore the law of continuous evolution and evolution of human culture (Lu & Wang, 2019). From the perspective of cultural construction and protection, cultural ecology will provide more macroscopic and clear theoretical support, and people standing on the perspective of cultural-ecological niche to study the cultural ecological balance can seek to make up for the lack of cultural-ecological niche of the initiative, to safeguard cultural pluralism, to ensure that the realization of the sustainable development of culture, and to protect the excellent cultural achievements

of human beings from extinction and loss (Abakarova & Gadzhinayev, 2013; Han, 2019).

The creation of any culture and art cannot be a sudden event but is the result of a long historical development and the progress of thought, culture, and society. Kite culture embodies the social and cultural ecological environment of each historical period, and can reflect the real situation of the natural, social, political, and cultural aspects of a specific historical period. Cultural ecology tries to refine the common characteristics of various cultural systems, and compared with the research in other similar fields, cultural ecology is mixed with too many rational and natural factors, which indicates that it is not purely humanistic research, so we can introduce scientific methods such as quantitative analysis into the study of culture, which distinguishes it from the traditional qualitative research, and makes it more scientific and theoretical, and it has a strong influence on the further understanding of the ecological significance of kite culture. It is more scientific and theoretical, and it has a strong role in promoting a further correct understanding of the ecological significance of kite culture.

2.3 Reasons for the Generation of Kites in Yangjiabu, Weifang, Shandong Province

2.3.1 Physical and Geographic Conditions

About 10,000 years ago, mankind came out from the primitive big forest and started farming and animal husbandry way of life, and mankind has gradually established its circle since then. But compared to the biosphere of the whole earth, the human circle is only a part of it. Any kind of culture exists in a certain cultural space and cannot be separated from the natural environment in which it is located. It can be said that the natural geographical environment is the most basic condition for the formation of culture and cultural areas. If it is said that "one side of the soil nurtures one side of the people", then "one side of the soil also nurtures one side of the culture". Different topography, different forests, and water systems, and different types of climate, will constitute a different natural ecological environment, that will have a direct impact on the local mode of production, customs, habits, etc., human beings will also create a different level of colorful cultural types. Geography and the natural environment have a great influence on the cultural generation and development of a region (Doan, 2023; Zhang, 2017).

Different topography and landforms, different forests and water systems, and different types of climate will constitute different natural ecological environments, which will have a direct impact on local production methods, customs, habits, etc., and human beings will create different levels of rich and colorful cultural types. Geography and the natural environment have a great influence on the generation and

development of culture in a region. Weifang City, Shandong Province, China is located in the center of the Shandong Peninsula, on the edge of the "JiaoLai Plain"[17], which is also located in the middle of the Luyi Mountain Range (Lu Mountain 1108, Yishan 1132) and the hilly areas of the Jiaodong Peninsula, and the "JiaoNan" in the southeast and northwest. In the southeast and northwest direction of the "JiaoLai Plain", the north and south have been extended to the vast Bohai Sea and the Yellow Sea; the LUYI mountain range and the Jiaotong Peninsula hilly area in the middle of the "JiaoLai Plain" has become the peninsula climate and the Bohai Sea, the Yellow Sea monsoon natural wind channel. Weifang is rich in wind resources in all seasons of the year, especially in the spring of every year, when the spring wind is strong, Weifang and the surrounding areas are good kite flying sites. Nature has given "Weifang kites" natural geographic conditions for long-term development, which is a natural factor for the development of kites in Weifang's specific regional environment (Li, 2019; Ziz et al., 2021).

Table 1 A test of the effect of wind speed on kite flying

Source: On the Development of Kite Sport in Weifang,2010,p.37 (Yang, 2010)

Wind power level	designation	Ground 10 meter high-speed wind unit: m/s	Situation of ground objects	The impact on flying kites
0	Windless	0.0---0.2	Cooking smoke rises straight up	The kite cannot take off.
1	Soft Wind	0.3—1.5	Smoke can indicate wind direction, leaves make a slight noise, but the wind vane does not rotate.	
2	light breeze	1.6—3.3	The human face feels the wind, the leaves make a slight sound, the flag shakes, and the wind vane rotates.	Fly small kites with an area of less than 0.5 square meters, such as soft winged kites and small hard winged kites.
3	breeze	3.4—5.4	The leaves and twigs sway, the flag unfolds, and the tall grass sways endlessly.	Fly a large kite with an area of about 1 square meter.
4	gentle breeze	5.5—7.9	It can blow up dust and paper on the ground, and shake branches.	
5	refreshing breeze	8.0—10.7	There are water waves on the surface of the inland river, and the high grass waves have obvious undulations.	Giant kites with a flying area of about 2 square meters are not suitable for soft winged kites.
6	Strong winds	10.8—13.8	The big tree branches sway, the wires whir, and it's difficult to hold an umbrella.	Only super large and giant kites can be flown.
7	gale	13.9—17.1	The whole tree shakes, and the big branches bend down, making it inconvenient for people to walk in the wind.	All kinds of kites are not suitable for takeoff.
8	high wind	17.2—20.7	It can break small branches and increase resistance when walking in the wind.	
9	strong gale	20.8—24.4	The thatched cottage was destroyed, the house was lifted up, and the big tree branches were broken.	
10	fierce wind	24.5—28.4	Trees are blown down and general buildings are damaged.	
11	Storm	28.5—32.6	The big tree was blown down, and most buildings were severely damaged.	
12	hurricane	Above 32.6	Land is rare and has great destructive power.	

[17] The JiaoLai Plain is located between the central and southern Shandong mountains and low hills and the Jiaodong low hills, and is mainly formed by the alluvial deposits of the Weich River, Bailang River, JiaoLai River, Dagu River and other rivers, with most of them below 50 meters above sea level.

Flying a kite requires the flyer to learn about, experience with, and skill in kite flying. This specialized skill requires some training to master. Similarly, kite flying also requires objective conditions including wind, season, temperature, and other weather conditions and space of the field. Weifang's climatic characteristics and geographic environment are the preconditions for the prosperity of kite flying in Weifang. The terrain of Weifang is high in the south and low in the north in the form of a ladder stretching toward the sea, and the geographic environment is more complicated than that of other coastal cities. Weifang is located in the western part of the Shandong Peninsula, the city is in the north temperate monsoon zone, with the backland facing the sea, and the climate is warm temperate monsoon semi-humid continental type. Characterized by: a cold winter and hot summer, four distinct seasons; spring winds and rain; hot and rainy summer, high temperature and humidity; autumn sky high, late autumn drought; winter dry and cold, cold winds blowing frequently. The average annual temperature is 12.3℃ and the average annual precipitation is about 650 millimeters. The daily variation of wind speed starts to increase at 8:00 a.m., reaches a peak at 14:00 a.m., and starts to decrease at 16:00 a.m., with a peak value of 4 - 5 meters per second. The wind direction is relatively homogeneous, with small transient fluctuations, and is mostly southerly or northerly. Precipitation is generally around 30 millimeters. The low-altitude atmospheric circulation is smooth, with little atmospheric turbulence, eddies, and turbulence. Moreover, due to the strong heating of the land temperature during the day, the air density becomes smaller and the air pressure is lower than that of the sea, and this air pressure gradient forms the sea-land wind blowing from the sea to the land, and the closer to the coast, the stronger the sea-land wind is. Weifang's climatic conditions can be compared with Table 1- A test of the effect of wind speed on kite flying, which can fully illustrate that Weifang's climatic conditions are very suitable for kite flying (Zhao, 2017).

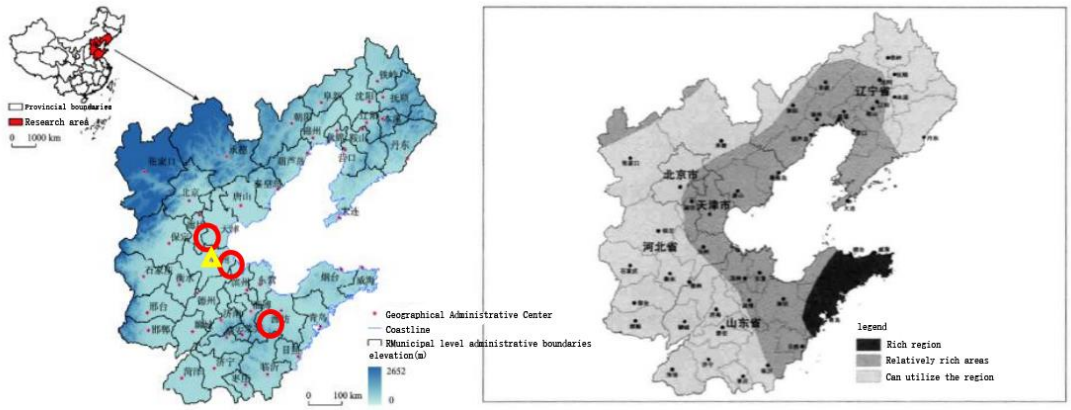

Figure 1 Map of kite-making techniques and wind resources in the Bohai Sea region

Source: Exploration of the Research and Inheritance Development Path of Kite Art in Bohai Rim,2019,p.2

2.3.2 Production Methods and Conditions of Output of Raw Materials for Production

Due to the history and folklore evolution and inheritance, kites have been popularized as folk crafts in Weifang. Therefore, the materials used in the production of "Weifang Kites" tend to be unique and convenient for the folk in the Weifang area. The reason why the fabrics of "Weifang kites" are mainly made of silk fabrics is that from the time of cold mud in the Xia Dynasty[18], the area around Weifang was the base of raising silkworms and drawing silk, and in the early period of the Qing Dynasty, Weifang is the famous silk production area of the whole country. Weifang Changyi[19] silk in the middle of the Qing Dynasty on the export of the South China Sea area. In addition to this also use the fiber's longer toughness better and thin and light paper material. The skeleton of kites in Yangjiabu, Weifang, is mainly made of bamboo, which is light, stiff, tough, and flexible. "The skeleton material of Weifang kites is mainly made of bamboo, besides the historical "Gongtu Zi (Lu Ban) chipped bamboo and wood for magpies", the handicraft industry of Weifang was extremely developed in the Qing Dynasty, which was known as "South Suzhou and North Weixian". Weifang was known as "Southern Suzhou and Northern Weixian". Zheng Banqiao, the famous "Eight Monsters of Yangzhou" in the Qing Dynasty, said, "Weifang is a small Suzhou". At that time, the bamboo weaving industry in Weifang was very developed, so the kite skeleton was made of bamboo, which was also the reason why it was more convenient to get the materials. Therefore, the development of kites in Yangjiabu, Weifang, to the present day is closely related to the traditional strip weaving, bamboo weaving, and tying techniques and cultural foundations it has (An, 2018).

In the Weifang area, it is very simple to tie kites as children's playing tools during the Qingming Festival, and villagers tie kites for their children as well, but the difference is that Weifang started to carry out strip weaving as early as the Qing Dynasty, and then gradually began to bamboo weaving, which laid the foundation for the development of kite industry later on. According to "Weidong Cultural and Historical Materials", "During the Ming Dynasty, the ancestors of Wangcun moved here from Laiyang, and the village has been mainly engaged in farming for generations. By the early Qing Dynasty, the village's agricultural production was based on strip braiding and tying." As the village is adjacent to the Weifang River to the east, the land on both sides of the Weifang River is fertile and well-watered, and both sides of the river are full of wax and cotton acacia strips. As the saying goes, "One side of the soil and water to raise one side of the people", the unique natural geography, of the villagers of the strip weaving ZhaShi provides convenient conditions for the material. The growth of these "strips" has common characteristics, that is, fast growth cycle, good toughness, repeatable material, and very suitable for weaving baskets, baskets, columns, and other objects. In traditional society, the

[18] The Xia Dynasty (c. 2070 BC - c. 1600 BC), was the first dynasty of slavery recorded in Chinese history books.
[19] Changyi, a county-level city under the administration of Weifang, Shandong Province, is located in the northwestern part of the Shandong Peninsula, downstream of the Weifang River and on the banks of the Laizhou Bay.

villagers mainly do farming production, in production life, the villagers need to hold things and objects, they go to the Weifang River to cut cotton acacia strips interspersed with bundled up to load things. Therefore, the "strips" grown in the Weifang River provided raw materials for Wangcun's strip weaving and tying. From self-sufficiency to income-generating sideline industries, villagers initially used the cotton and acacia strips and waxed strips from the river to weave some agricultural implements for living and production, and later these implements were gradually turned into commodities used for trading to generate income (Jia, 2016; Lin, 2018).

In addition, it is also recorded that "Weifang strip weaving started as early as the beginning of the Qing Dynasty, and at the beginning, it started with weaving a few "pillar cages"[20] used for chopsticks and "shallow cages"[21] used for dry food, and later on, wickerwork was used to weave some agricultural utensils for daily life and production. Later, willow and mulberry strips were peeled off to make strainers for fishing dumplings. With the development of the craft, they gradually made dung baskets, carry baskets, and partial baskets. During the idle period, surplus laborers gradually began to make bamboo weaving to make up for the lack of income from agricultural production. Subsequently, because bamboo is tough, durable easy to characterize, and more suitable for tying, it was gradually shifted from the strip weaving industry to the bamboo weaving industry. At this time, every family planted bamboo, and then because of the better toughness of bamboo from Fujian and Sichuan, the villagers began to introduce bamboo from Fujian and Yunnan, and transported it to the Jiaonan area of Qingdao by train, and the villagers organized themselves to transport it to the village by horse-drawn carriages and distribute it according to the previously scheduled bamboos, and the maximum number of trains could be transported over ten per day. Until today bamboo weaving rolling production has never been broken in Weifang (Chen, 2017; Satvant et al., 2016). The bamboo weaving and tying carried out in Wangcun provided favorable conditions and laid the foundation for kite rolling.

พหูนํ ปณฺฑิโต ชีเว

[20] Utensils for chopsticks
[21] A utensil for holding things prepared from purple acacia.

Location	Time	Store Name	Main products	Responsible person
WeiCounty town	In the late Qing Dynasty	QianShengDong	Bamboo weaving products and willow products	WangWenJu(Founder)
Qingdao City	In the late Qing and early Ming dynasties	DeJuDong	Bamboo weaving products and willow products	WangNianChen
Jinan City	In the early years of the Republic of China	XingShengFu	Bamboo products, brooms	WangZeXian
Zhoucun City	In the early years of the Republic of China	QianShengDong	Bamboo products	WangWenJu(Founder)
Yidu City	In the early years of the Republic of China	QianZhengDong	Bamboo products	WangYingFang\WangYingLi
Harbin City	Around 1945	Bamboo Products Factory	Bamboo products, brooms, bamboo baskets	WangYanQiang(Founder) WangYanZong\WangPeiChen
Changchun City	Around 1948	Bamboo weaving equipment	Bamboo brooms and bamboo fences	WangShanTing(Founder)

Table 2 List of bamboo weaving stores in Wangcun from the late Qing Dynasty to the Liberation Period
Source: Weifang Wangcun Kite Industry Development Research,2020,p.13

2.3.3 Historical and Human Factors

The birth of Chinese kites has a history of more than 2,000 years, Chinese kites originated in Shandong Province, more precisely from Weifang City, and the key figures in the development of Chinese kites have a close relationship with Weifang.

The earliest prototype of the kite: "Snail Ancestor Begins Silkworm"[22]. Huangdi Yuanfei John's ancestor invented sericulture, john female is the world's greatest inventor of sericulture silk, this invention was China, benefiting the world, in the history of China and the world's civilization, they wrote an extremely bright and brilliant chapter. In the Xia Dynasty, it is said that the descendants of the Xia Dynasty Cold Nai were inspired by the windy rise and fall of leaves when they were raising silkworms in the area of Cold Pavilion in Weifang, and they "used bamboo seal scripts as the bones, decorated with bird feathers in the shape of parrot eagles, and sent them into the air with the wind to drive birds and sparrows to protect the silkworms." This is the earliest prototype of kites.

The First Kite in Chinese History: According to the historical text, the first kite in Chinese history was developed by Mozi and Lu Ban in the Spring and Autumn

[22] Rayon, also known as Kinko, Leizu, or Leizu, is one of the legendary figures of prehistoric Chinese society, the daughter of the Xiling clan, and the first consort of Emperor Xuanyuan Huangdi. She invented the silk worm, which is known as the "first silkworm".

Period and the Warring States Period (770 B.C.-221 B.C.). The great historian of Chinese history Sima Qian (135 B.C. - 86 B.C.) in the "Historical Records", "Han Fei Zi - outside the reserve said" in Mo Zhai live in Lu Mountain (now southwest of Shandong Qingzhou) "wood for the parrot, three years and become a fly one day and defeat. This is to say that Mozi studied for three years, finally made of wood a wooden bird, but only flew a day on the bad (as for the "fly a day and defeat" reason, here put aside for the time being). Mozi. Lu asked the chapter" recorded: "Gongshizi (Luban) cuts bamboo and wood into birds, flies them, and does not descend for three days.". Mozi and Lu Ban were both from the state of Lu in the Eastern Zhou Dynasty, living in Lu Mountain. According to the relevant documents, at that time, Lushan was the Lushan mountain range in the southwest of Qingzhou, Weifang City. Therefore Weifang is the hometown of Chinese kites has been recorded as early as more than two thousand years ago (Adam, 2015; Ji & Shi, 2018).

Weifang history of literati and Weifang kites: Kites in the Tang Dynasty have been into the poems, the early Song Dynasty has been into the paintings, the Yuan Dynasty has been into the plays, and the Ming and Qing Dynasty era has been into the novel. Turning over the scroll of Chinese literary history, browsing the vast cultural and artistic treasury, from the Han Fu Tang Poetry and Song Lyrics to the Yuan Dynasty, Ming Dynasty, and Qing Dynasty novels, kites as the subject matter of countless people. In the history of Weifang, literati and ink masters have had a close relationship with Weifang kites. Just to cite a few famous examples at home and abroad, in the Northern Song Dynasty, Zhang Zeduan, who was born in Zhucheng, Weifang, painted the scene of a kite flying by children in Bianliang, Tokyo, in the famous Chinese custom painting scroll Qingming Riverside Drawing on his famous heirloom work. It has left valuable information for future generations to study kites. Meanwhile, we can see from the kite modeling in Qingming Shanghe Tu that the kite artists in the Northern Song Dynasty had developed from a single bird modeling to many types (Liu, 2016).

By the middle of the Tang Dynasty, with the stabilization and prosperity of the society, the function of kites began to shift to the recreational aspect, and their shapes began to shrink, especially the appearance of paper kites, which played a considerable

role in the transformation of the function of kites. Many poems glorifying kites appeared in Tang poems. On the kite of Confucius, the old man is light and high in spirit, which makes people feel in awe. On the wings of the kite, the four words "Teacher of the World" are written in seal script, warning the world of the philosophy of "benevolence, righteousness, courtesy, wisdom and faith", which can also be a glimpse of the traditional spirit of Confucius in the hearts of the people of Weifang. Zheng Banqiao[23] was a painter, calligrapher, and writer in the Qing Dynasty. During his tenure as a magistrate in Weifang County, he was an upright and honest official and was loved by the people, and his descriptions of the kites in Weifang County in his literary works are important historical information. His description of Weixian kites in his literary works is important historical data. People regarded his attitude and philosophy of life, which is "hard to get confused", as the truth. During the Song Dynasty, kites were developed greatly, kite varieties not only increased a lot, but also improved performance of a lot, and from the palace began to widely flow to the folk, "Old Story of Wulin" in the "Young Boy competing in the paper kite, to seduce each other, and pull each other to cut off the line of those who have been negative" records. With the development of the commodity economy, the kite gradually became the subject matter of literati and painters in the past generations, at the same time, annual painting, Chinese painting, calligraphy and novels, and literary character allusions have also become the subject matter of Weifang Yangjiabu kite pattern performance, so the reason why Weifang County in ancient China can become the birthplace of the kite and the development of kites, in addition to the near-natural superiority of the natural geography, and also has profound humanistic and historical origins of the reasons. The reason why Weifang has become the "Kite Capital of the World" nowadays, in addition to the modern times and the efforts of our generation, there are also the above humanistic historical origins here. The evolution of human history and the inheritance of folk traditions and customs are the human factors that enable the development of the intangible cultural heritage of "Weifang Kites".

พหูนํ ปณฺฑิโต ชีเว

[23] Zheng Banqiao (November 22, 1693 - January 22, 1766), formerly known as Zheng Xie, with the characters Ke Rou, Li An, and Banqiao, also known as Mr. Banqiao, was a native of Xinghua in Jiangsu Province, with ancestry in Suzhou. He was a painter, calligrapher and writer in the Qing Dynasty.

2.4 Types of Kites in Yangjiabu, Weifang, Shandong Province Craftsmanship and Local Wisdom

2.4.1 The Sects of Kites in Yangjiabu, Weifang, Shandong Province

Weifang is known as the capital of kites, and the important reason for such a reputation is that it has inherited the kites in a long history. Today, Weifang kite art has many varieties, and due to the different life experiences, different cultural levels, and different knowledge structures of kite artists and kite makers from all walks of life, different systems and genres have been formed. In the Qing Dynasty, the most famous Weifang kite artists were Chen Mute and Wang Fuzai. Mute Chen's kites were famous for zipping, and his kites were light in the skeleton, strong in structure, and very beautiful in shape. Wang Fuzai is a tie-color artist who is good at painting. His character kites are detailed, with vivid expressions, the most famous of which are "Crane Boy" and "Lei Zhenzi Carrying the King of Wen". He also integrated traditional folk painting techniques into the painting of kites. After the nineteenth century, Weifang kites were mainly influenced by Weifang folk art of clay sculpture, embroidery, and woodblock prints, and in the process of long-term development, the traditional folk kites with the characteristics of woodblock prints and the old Weifang traditional artisans with the old Weifang Zacai artists and the literati who loved paintings were gradually formed.

2.4.1.1 Traditional folkways

Weifang folk kites, historically speaking, are relative to court kites and artisan kites, and in modern times, are relative to modern new-style kites, which are characterized by:

(1) The makers of folk kites, most are farmers and craftsmen, generally speaking, they have not been specially trained in art, and their biggest feature is that they are closely related to New Year's Paintings, and whether it is the modeling, the materials

used, the configuration of colors and the style of making, they all have a strong vernacular flavor.

(2) Most of the folk kites are made in combination with the traditional festivals of Qingming[24] and Chongyang[25] Festival, so their themes are selective, the paintings focus on thick ink and heavy colors, and the forms are bold and exaggerated.

(3) Folk kites are generally made from local materials and scorned papier-mâché, with little care and rough style.

(4) Folk kites are influenced by regional culture, economy, customs, and habits, and they often observe and consult each other in the production, plus the factors of ancestry and hereditary, so folk kites are colored with ancient traditions and are a kind of collective creation.

2.4.1.2 Traditional artisan factions

Weifang traditional artisan kites can also be called the old Weifang City School kites, Weifang City School kites are an important part of the old Weifang County "elegant culture" centered on the Shikwuyuan[26], and they are also the typical representatives of the traditional artisan school. The kite artists of Chenggong School integrated Chinese painting skills into the kite painting, forming the "Chenggong School" brush painting kites with great appreciation value, "not emphasizing on the natural resemblance, but seeking to write God with the shape, paying attention to the beauty of the pattern, and a strong sense of three-dimensionality", with the elegant and humanistic implication of Chinese brush painting, forming a unique style. humanistic connotations, forming a unique artistic style (Chen, 2017). Weixian kites were handmade by some tie-color artists in old Weixian County who worked together with literati who loved painting. In the 1830s, Weixian kites formed the "Ten Great Masters", whose kites represented the artistic characteristics of Weixian kites. They made kites that represented the artistic characteristics of Weixian kites and used many themes, such as birds, figures lanterns, etc. Each of them had different styles and characteristics. Each of them has different styles and characteristics, but on the whole, they generally have the characteristics of beautiful shape, exquisite tying, bright colors, and smooth take-off.

The kites of the City School are made of silk and carefully tied, and they are a marvelous piece of Chinese arts and crafts from the selection of materials and materials to the braiding and drawing, all of which are perfect. "The method has been

[24] Qingming, one of the twenty-four solar terms, is the fifth solar term in spring. Qingming generally varies between April 4 and 6 on the Gregorian calendar and is not fixed to a particular day, but April 5 is the most common. The Qingming festival, which is related to the time of the year and the weather, is often used as a guide for farming, with the meaning that the sky is clear and it is the right time for spring plowing.

[25] Chongyang Festival, a traditional Chinese folk festival, is held on the ninth day of the ninth month of the lunar calendar every year.

[26] Also known as the Ding family garden, located in Weifang City, Shandong Province, Weicheng District, Hu Jia Paifang Street 49, an area of about 2,000 square meters, because of the area is very small, the people of the time referred to it as "ten watts", so it was named "Ten Wat Garden".

passed down since ancient times, as thin as hanging silk", oral teaching is the unique inheritance method of Weifang artisans' kite culture, and the kite inheritance emphasizes family transmission, thus forming the famous ten families of Chengpai kites. The inheritance of "City School" kites is also facing a serious situation, many kite craftsmen have changed their profession or their inheritance has been cut off, and only a small number of kite craftsmen are continuing in the form of master and disciple teaching or father and son inheritance.

In the history of Weifang, a lot of famous painters also participated in the drawing and even designing of kites, which made the Weifang kites appear very exquisite and fine products. These fine products are not affordable to the common people, and the rich people who buy these kites often put forward personalized requirements and order them from the artists, which is the case of the proverb "seven parts of the master and three parts of the craftsman". In addition, during the change of the old and new dynasties, some palace kite artists fell to the folk, which also promoted the development and improvement of the artisan party kites, making them with the solemn and luxurious features of the palace kites. The traditional artisan school has played a good role in promoting the development of the kite business in Weifang, which has made Weifang kites rise from general toys to valuable handicrafts and become an important part of Weifang culture.

2.4.1.3 Modern innovation faction

Thanks to the enthusiastic participation of the majority of professional art workers, scientists, workers, and urban residents in kite-making activities, the advantages of modern craftsmanship, modern science, and technology have been brought into full play, and brand-new modern kites have been created based on the inheritance of traditional kites. The main feature of modern kites is that they pay attention to the use of new materials and techniques, improve the traditional bamboo tying process into modern charcoal poles, replace the hand-painting process with machine printing, and have simple, bright, fresh and ingenious shapes that can be mass-produced, with a distinctive epochal character (Ji & Shi, 2018).

2.4.2 Types of Kites in Yangjiabu, Weifang, Shandong Province

If the modeling of Beijing kites is representative of court style, then the modeling of Weifang kites has a long history and has become the finest of folk kites with its simple and simple, fresh, and lively style that has a strong sense of life. As early as the Qing Dynasty, Weifang kites were already very prosperous, and there were more than 30 kite-making workshops and kite-selling stores, among which the Tang family store, which started at the end of the Ming Dynasty, was the most famous. There was also a special market selling kites under the city wall in the east city, and it was popular to go trekking in the countryside and fly kites by the river during the cold food and Qingming Festival.

In Weifang during the Qing Dynasty, many folk artists made kites as their business. For example, "Tang Family" kites. Tang family kites started at the end of the Ming Dynasty, and their works were circulated in the three provinces of Qingzhou, Laizhou, and Yizhou[27]. In the Qing Dynasty, their ancestors passed down the "Zachi-Color Spectrum", which introduced 21 kinds of kites' tying methods. The 1930s was the flourishing period of Weifang kites. After the founding of New China, especially since the reform and opening up, Weifang kites have entered the heyday. To promote this excellent folk tradition, the International Kite Festival was held in 1984 under the initiative of the Weifang government (Song, 2015).

Weifang kites have characteristics that unify them with folk woodblock prints. "Hundreds of workshops, more than a thousand kinds of paintings, every family knows how to point and dye, every household is good at painting, carving the boards after harvesting the big fall, busy until the twenty-third of the Lunar New Year". Yangjiabu woodblock prints in the Ming Dynasty business have been very popular. Its masked materials were half-printed and half-painted, and even the printed nianhua were directly mounted on the kites. Its color painting emphasizes the original color and the inter-color made by overprinting and seldom uses compound color. The colors are bright and contrasting, with a strong local flavor, and the shape is neat, symmetrical, and balanced, "firmly tied, flatly glued, finely painted and steadily released". Fine workmanship also attaches great importance to the effect of flying, so that it becomes a "put in the sky is a kite, hanging on the wall is a New Year's Eve painting" art charm. The artists design various shapes of kites according to people's psychological needs and activities. In the kite and woodblock New Year's paintings workshop in Weifang, which is a typical folk courtyard building style, you can see the whole process of carving woodblocks, brushing and printing New Year's paintings, and tying kites by the artists.

[27] Urban areas near Weifang.

Weifang kites have a wide variety of shapes and forms. For the convenience of research, some researchers divide the kites into different categories. According to their modeling, they can be further divided into six categories, namely, Weifang string kite modeling, Weifang barrel kite modeling, Weifang board kite modeling, Weifang hard-winged kite modeling, Weifang soft-winged kite modeling, and Weifang free class kite modeling. Weifang kites are in various forms, which can be roughly categorized into six major categories: string, barrel, hard-wing, soft-wing, board, and dynamic.

2.4.2.1 String kites

String kites are traditional kites with extremely complicated craftsmanship and great ornamental value. These kites are made by stringing several identical or different kites together with threads, so they are called string kites. The most representative one is the Weifang Dragon Head Centipede Kite.

Figure 5 String Kites

2.4.2.2 Board kites

Board kites, also known as "board kites" and "beat kites", are a kind of widely used and very common traditional Chinese kites. This kind of kite has a skeleton supporting the edges of the lifting piece, forming a plate-like structure, so it is called a plate kite. Board kites are especially suitable for the creation of arts and crafts, and thus have a wide range of themes, from birds, flowers, insects, and fishes to characters and stories, the most typical of which are octagonal bagua board kites (e.g. The Eight Immortals Crossing the Sea stored in Weifang Museum of Industrial Arts and Crafts), and the board cicadas kite of old Weixian County, and so on.

Figure 6 Board Kites

2.4.2.3 Kite with soft wings

It is the most common and popular traditional kite in China. The lifting piece of this kind of kite consists of a main wing bar and a wing-shaped mask, which is called a soft-winged kite because there is no hard structure in the lower part of the two wings, which is "cut according to the shape without 'bones'". When a soft-wing kite is flown, the wind escapes from the lower part of the two wing masks, forming an upward force, so it has a better take-off performance.

Figure 7 kite with soft wings

2.4.2.4 Hard-winged kite

Also called "Yuanbao wing kites", they are the most characteristic and typical traditional kites. This kind of kite has many different styles and skeleton structures depending on the content of the theme, but both sides are equipped with a unique lifting piece - consisting of two backward bending bamboo strips, bladder line and covered with masking paper, forming a stable structure of the ventilation channel (wind pocket), which is shaped like a wing, and thus called a hard-winged kite. The Weifang City School's brushwork figure kites are the leading hard-winged kites.

Figure 8 Hard-winged kite

2.4.2.5 Cubic kites

Three-dimensional kites, also called tube kites and barrel-shaped kites, usually have a folded skeleton, covered with a mask, with one or more obvious three-

dimensional structures resembling cylinders or rectangles. The traditional Weifang City School three-dimensional kites are mostly based on palace lanterns and vases, and the masks are painted using the techniques of brush painting[28], which are very delicate.

Figure 9 Weifang Yangjiabu multi-layer three-dimensional figure kite
Source: Susu Zhang,2023.9.28, Photography

2.4.2.6 Dynamic kites

Broadly speaking, kites that can "move" with the help of wind power through the change of force of "wind impeller" and kite skeleton can be called "dynamic kites". Old Weixian's Chennai kite artists innovated and developed "kite touching", integrated the design of "dynamic kites" into other kinds of kites, and made outstanding contributions to the development of "dynamic" kites. They have made outstanding contributions to the development of "dynamic" kites.

2.4.3 Handicraft of Yangjiabu Kites in Weifang, Shandong Province

When making traditional kites in Yangjiabu, Weifang, you need to use bamboo, paper, silk, thread, paint, and other materials, which are taken from nature and are light and strong. The specific production techniques can be divided into four steps: "tying, painting, gluing, and releasing". The process of kite tying is very complicated, and each process is extremely tedious. In different kinds of literature, the process of kite tying is slightly different, but it is generally believed that there are six main processes in kite tying: designing, preparing materials, tying, masking, painting and coloring, and bolting the timeline. Yangjiabu people often use a phrase to describe

[28] Work-brush painting, also known as "fine-brush painting", is one of the categories of Chinese painting techniques. It is symmetrical with the "pictorial painting". It belongs to the category of neat and detailed painting, such as the courtyard painting of the Song Dynasty and the figure painting of Qiu Ying in the Ming Dynasty.

kite-making work: "A good man doesn't want to do it, but a bad man can't do it". It takes three to five years to learn how to make a skeleton, half a year to learn how to make the skeleton of a single kite style, and at least three years to master the painting of the kite surface (which refers to people with no foundation in fine arts), and several months to learn how to make a style. Similar to other folk crafts, there is no fixed theoretical basis or strict knowledge of kite-making techniques and processes, and the mastery of techniques is accumulated through time and experience (Lin, 2018; Liu, 2023).

2.4.3.1 Strap

No matter what kind of kite is made, the kite style is designed before making, and the drawing is made according to the scale drawing, and then the length of each bamboo strip is measured out and labeled on the drawing with a soft ruler. At the same time, the length and width of the wings of the flying bird kites are also determined, generally speaking, the length of the wings is twice the length of the body, and the width of the main body of the wings is about the same as the length of the body. In addition to size and dimensions, the design plan has another purpose, which is to carry out the kite for the proper splitting of the various parts and to prepare all the designs for the final combination. This is followed by selecting bamboo that has grown for more than three years, has a long pitch, good elasticity, and is free from insects, and tying the skeleton after sawing, splitting, trimming bamboo strips, baking, bending, fine splitting, and tying, as shown in the following diagram (Zhang, 2017).

Serial number	Photograph	Explanatory notes
1		Selection of bamboo: first of all, you need to choose suitable bamboo, usually choose a growth of more than three years, long pitch, good elasticity, and no insects.
2		Bamboo Sawing: Use a hacksaw to sew bamboo into sections of the desired length.

3		Splitting bamboo: Use a cleaver to split the bamboo section into slightly larger strips than needed, paying attention to the knife to be fast and accurate, to prevent splitting and wasting materials.
4		Trimming bamboo strips: File the bamboo joints with a file to ensure that the surface of the bamboo strips is flat and free of bumps and burrs.
5		Baking: After soaking the bamboo strips in water, bake them on a heating tool such as an alcohol lamp. When baking, you should keep turning the bamboo strips to make them evenly heated and bake them until you can gently break them. Pay attention to the degree of fire baking should be moderate, if baking too hot bamboo strips will become charred, affecting the beauty and strength.
6		Bending: After baking, the bamboo strips become soft and can be easily bent into desired shapes. Be careful when bending to avoid breaking the bamboo strips.
7		Fine bamboo splitting: If the kite work requires symmetrical shapes, such as insects, fish, etc., you need to split the bamboo strips in half to make sure that the two parts are the same after splitting. At the same time, the split bamboo strips should be treated more delicately by scraping off excess burrs and making the strips smooth. It takes a long time of practice to master the technique.

8		Tying: Once all the skeleton parts of the kite have been made according to the above steps, it is time to tie them. Use cotton or nylon thread to tie all the skeleton parts together in specific positions, and check whether the parts are symmetrical and whether the whole is stable after tying.

Figure 10 Kite Making Process - Handling Bamboo Strips, Taping

Take the butterfly kite as an example, the skeleton is divided into three parts: body trunk, wings, and head. The body trunk consists of several parts: the main trunk strip, the side strip, the thorax strip, the belly strip, the abdominal strip, and the tail strip. The wings are composed of three parts: the main wing bar, the wing support bar, and the wing joint bar. The head is mainly composed of fine wire, hard paper, and round bamboo strips. The connection between the main wing bar and the kite's main skeleton needs to be thinned down for easy disassembly and assembly. The wing support strips not only enable the kite wings to stretch out when flying but also play a role in stabilizing the kite wings, which mostly form a triangular structure with the main wing strips (Zhang, 2017). There are various kite frames and different ways of tying them, and the craftsmen have summarized rich experiences in tying kites, and some of them have even made up song recipes. For example, the mnemonic for tying a hard-winged fat swallow is the Fat swallow four-four method latest, one head, one belly, one tail root. -The dead bar is flat and straight, and the lower bar is flat and soft, so it follows the shape. The seven sections are divided into seven equal parts, the two bladders are tied in a semicircle, the middle belly should be counted according to the double points, and the upper end of the tail bamboo should be searched for in the center line. How to determine the length of the lower end, the first, and the last thousand of the horizontal frame. There are four pieces of paper in the center of the bracket, and each of the two bladders must be in the same position. The head is windy and the belly is the main part, and the coronet bamboo should be soft and good for wind. The crotch is fat, the paper is wide and soft on one side, and the wind will not be lamented (Zhao, 2017).

There are a variety of materials used to attach kite skeletons, including thread, linen, strips of paper, and textiles. The choice of these materials should be determined by the size, shape, and flight requirements of the kite. For example, for larger kites or kites that need to withstand higher winds, it may be necessary to choose a stronger material such as hemp skin or thread for the skeleton. In terms of attachment methods, there are three main types of kite skeletons: vertical, parallel, and inclined. Each of these connection methods has its characteristics and is suitable for different kite-making needs. Vertical connection: Vertical connection is one of the most common connection methods for kite skeletons, and it is divided into three types: cross

connection, snap connection, and lap connection. The cross-connection is simple but not very strong, and the skeleton may not be flat; the snap connection requires one bar to be split and stuck on another bar, which is not as strong as the lap connection but flatter than the cross-connection; the lap connection requires one bar to be bent at 90°, which is strong and flat, and can be used for parallel tying method. For a kite skeleton that needs higher strength, it is recommended to use a lap connection or snap connection (Wang & Zhao, 2021). Parallel connection: Parallel connection is divided into two kinds: oblique mouth connection and lap connection. Two connected bamboo strips cut each other beveled, and then tied together called a beveled joint, so that both are flat and beautiful, but the length of the beveled mouth should be in the thickness of the bamboo strips more than 6 times, to have enough strength. A lap joint is the end of a bamboo strip over the middle of another bamboo strip and then tied. This type of connection is suitable for kite skeletons that need to be lighter. Inclined connection: The inclined connection is similar to the vertical connection, except that the angle is different. It can also be used in three ways: cross, lap, and snap. The tilt connection is less common in kite building but may be used in certain kites with special shapes or functions. In addition to these three basic connection methods, there are some special connection techniques worth mentioning. An example is the buckling wedge, which is a method of perforating the longitudinal skeleton while the transverse skeleton is perforated for coupling. This type of connection is very effective in making kite parts with rotating bodies, such as the bellies of birds and bugs, flower baskets, and lanterns. In addition, the live head is also a commonly used connection technique, mainly used for parts that need to be folded to make a movable joint, which makes it easy to store and carry the kite.

When connecting the kite skeleton, you also need to pay attention to the following points: firstly, make sure that the connection is flat and free of gaps to ensure the stability of the kite during flight; secondly, choose suitable tying materials and methods to ensure that the tying is firm and not easy to be loosened; and lastly, carry out the necessary reinforcement treatment on the connection, such as increasing the number of times of tying or using the reinforcement sheet, etc., to improve the durability of the kite. The connection skill of the kite skeleton is one of the important links in kite making. By choosing suitable connection materials and methods, mastering the correct connection methods, and paying attention to the details of the connection, a kite skeleton that is solid, durable, and has good flight performance can be made (Song, 2015).

2.4.3.2 Paste

Paste kites with paper or silk, etc., can be determined according to the form of the kite, inverted, such as, paste the dragon kite with silk, because silk is better than the transparency of the paper, more like the wings of the living dragon, paste the dragon blue fish tail with silk, fly into the wind shaking like the tail of the fish, paste

the eagle can not be used in the silk, because the silk by the wind after the shaking of the eagle does not look like spinning in the air, it must be used with leather paper, traditional kites in Yangjiabu commonly used in the local paper! "Mulberry paper" production, the mulberry paper production process is quite complex, the entire production process needs to go through more than 20 procedures, and after nearly a month to complete, its main processes include soaking, steaming, rubbing, pounding composting, and cutting composting, stacking composting, mixing, manipulation of the paper as well as the sun drying and so on, the following is an example of the main steps in the production of mulberry paper:

Serial number	Photograph	Explanatory notes
1		Soaking: The mulberry bark stripped from the branches of the mulberry tree is immersed in a pool of water, and after soaking for a certain period, the softened mulberry bark is divided into small bundles and put into a pool of lime water for a second time, so that it can be purified and bleached.
2		Steaming: the lime water soaked mulberry skin disk into a small bundle on the special pot cooking steam, for about 8 hours, steamed, and then smothered for 2 days to let the mulberry skin ripe.
3		Rub: After cooking and steaming the mulberry skins, the artisan rubs and kneads the skins with his feet to remove the black skin from the outer layer of the mulberry skins.
4		Pounding compost and cutting compost: put the treated mulberry skin on the stone plate, and use pounding dirt to pound evenly, pounding the more rotten the better. Then the mulberry bark was pounded into compost, patted into a width of about 8 centimeters, 2 centimeters thick, about 60 centimeters long dirt strip, and then cut into pieces with a special knife.

5		Stack composting: the raw materials are chopped up and rinsed in water on a very fine mesh. The longer the rinsing time, the cleaner the raw material, but also the more expensive the material, and the whiter the resulting paper.
6		Stirring: put the washed scale into a rectangular pool called Han, Han's water should be added to the steamer water when steaming raw materials, only this kind of water can be stirred to float the scale. After the raw material is put into the pool, mix it with Ohan and stir it in Ohan until all the scale in Ohan floats on the top.
7		Manipulating paper: The key process of making mulberry paper is to manipulate the suspended mulberry fibers from the Hanchi pool by a craftsman with a special bamboo foil, to manipulate the paper, the edge of the paper should come out first, and then dig and manipulate the paper, and then the paper will be shaped.
8		Sun drying: after the paper manipulation is good, stack stacks, stacks of paper must first be placed in the loess air water, empty after separating one by one for drying, mulberry paper after drying air-drying, the color becomes white.

Figure 11 Kite Making Process - Mulberry Paper Making

The kite is then glued. Before gluing the kite, it needs to be undercut, that is, the masking material is cut to the right size according to the shape and size of the kite skeleton. Note that it should be slightly larger than the kite skeleton to ensure that it can be completely covered and leave some edges for gluing or cutting. Then glue, mask, flatten, and process the edges. There are two ways to paste the edges; one is to paste the paper packages on the four sides of the bamboo strips, which is called "wrapping the edges", and the other is to paste the paper packages on the two sides of the bamboo strips, and then cut off the excess paper with a knife after the paste dries, which is called "cutting the edges". This method is called "cutting edge". This method is to reveal part of the bamboo strips to show the artist's production skills. The kite can be glued and then painted, or painted and then glued. The specific paste method of each kind of kite is also different, such as the swallow kite first pastes two bladders, then pastes two legs. Finally, the head and belly are glued, the rice kite is also glued with two bladders first, and the beat kite is glued with flat paste, etc. The specific steps are shown in the figure below (Zhao, 2017).

Serial number	Photograph	Explanatory notes
1		Prepared Materials: Cut the masking fabric to the appropriate size according to the shape and size of the kite skeleton. Take care to be slightly larger than the kite skeleton to ensure that you can cover it completely and leave some edges for taping or cutting.
2		Glue: Use a brush to apply the adhesive evenly to the kite skeleton. The consistency of the glue will depend on the selected masking material. If the masking material is thin, you can choose a thinner glue; if the masking material is thicker or needs stronger gluing strength, you should choose a thicker glue.
3		Masking: Place the cut masking material exactly on the glued kite skeleton, taking care to move as little as possible to ensure accurate positioning. The masking material should be laid flat on the skeleton, and the degree of elasticity should be consistent at all places to avoid twisting and deformation of the kite.
4		Flattening: After the masking material is positioned, gently press around it with your hands to make the masking material fit closely to the kite skeleton.
5		Handling the edges: Depending on the size of the kite and the strength of the bond between the masking material and the skeleton, different methods of handling the edges can be chosen. For example, if the kite is not too big and the glue is strong enough, you can just cut off the excess edge with a knife, which is called "trimming". If more strength is needed, you can cut off part of the excess edge, leave a portion of it glued, and roll it over; this is called "rolling the edge". When more strength is needed, the excess can be sewn back together after rolling the edge, which is called "sewing the edge". If a plastic film is used as a masking material, the excess edge can be rolled over and then glued, which is called "gluing", because the bonding strength to the skeleton may not be sufficient and it is not suitable for sewing.

6		Checking and correcting: Constantly check the correct position of the kite skeleton during the gluing process, and correct any distortion or asymmetry if found.

Figure 12 Kite-making process-paste

In addition, the order of gluing and painting will be adjusted according to different situations. According to the author's observation, different parts of the kite adopt different sequences and methods. The main body of the kite skeleton is usually glued before painting, mainly because the gluing of the main body of the kite needs to be soaked in water, and there are many positions for gluing, so the effect of the pattern will be ruined if it is painted before gluing; while the wings of the kite are usually painted before gluing, and the kite surface is painted, then ironed and flattened, then glued onto the wing skeleton.

2.4.3.3 Coloration

The painting composition and coloring of kites can best reflect the local characteristics. The paintings of Weifang kites are partly painted by professional painters and partly painted by folk artists. Professional painters generally paint characters and historical stories, characterized by strict composition, smooth lines, fresh images, and elegant hues, as Weifang Gongmei City School kites of brushwork painting style is a representative of professional painters' painting. Folk artists mainly absorb the characteristics of the woodblock prints of Yangjiabu in the Hanting District of Weifang, the contents are mostly auspicious and joyful, the compositions are full, the lines are rugged, and the colors are based on the colors of red, yellow, and blue, and the heavy brushwork is thickly smeared with a bright and simple hue. The block color is the main color, which very distinctly highlights the simple and strong color of folk art, and the fusion of local folk art makes the Weifang Yangjiabu kites unique (Wang, 2022, p. 66-69). The specific drawing steps can be divided into the steps of designing the pattern, preparing the surface of the kite, toning and coloring, detailing, retouching and adjusting, drying and protecting, as shown in the following figure (Wang et al., 2022).

Serial number	Photograph	Explanatory notes

1		Designing kite patterns: You can start with a sketch or make a draft directly on the kite to determine the pattern, color, and layout to be drawn. Consider the shape and size of the kite and design a suitable pattern, which can be traditional, modern, abstract, or figurative.
2		Preparing the kite surface: Make sure the kite surface is clean, dry, and flat so that the paint can adhere better. If the kite material is not specifically designed for painting, it may be necessary to apply a primer or treat the surface first to enhance the adhesion of the paint.
3		Mixing and Coloring: Mix the desired colors on a palette, paying attention to color matching and layering. Use the paintbrush to start coloring according to the designed pattern, you can start from the background or a large area of color. Pay attention to controlling the thickness and uniformity of the paint to avoid thick or uneven.
4		Portrait of details: After the basic colors are laid down, start carving details such as adding lines, patterns, or text. Use a small paintbrush for fine detailing to enhance the visual effect of the kite.
5		Retouching and Adjustment: Retouch and adjust the colors as needed to make the picture more harmonious and unified. You can touch up the colors or add details such as highlights after the pigments have dried.

6		Drying and Protection: Allow the kite to dry naturally or use a hair dryer to assist in drying, taking care to avoid the pigments running or blending into each other. If necessary, spray a layer of protective paint on the dried kite to enhance the durability of the color and waterproof. Meanwhile, carefully inspect the finished kite and make corrections or additions to any unsatisfactory parts. Make sure all colors are dry and free of imperfections.

Figure 13 Kite-making process-coloration

2.4.3.4 Fly

Kite-flying tools include lines, winding tools, and various add-ons for games. The lines for kite flying are "sewing line"[29], "small line"[30], "clothesline"[31], "silk rope", "hemp thread"[32], and so on. The most common tool for winding lines is the "thread spool", which is a kind of hexagonal thread spool worn on a shaft and can be freely rotated to release the line. It is a kind of hexagonal spool of thread on a shaft, which can be freely rotated to release the thread. It is very convenient to pull the thread with one hand and play the wheel with the other when collecting the thread, and the appearance is exquisite and lovely, which is a favorite toy in itself; there is also a kind of "simple arenga", which wears a kind of flat frame on the shaft, which is also very convenient to use. If the kite is enlarged, it is necessary to use a "line crutch"; if it is even larger, it is necessary to use a "winch". There are many kinds of kite attachments, which are used for games when flying kites, mainly "organ", "gongs and drums", and "food deliverers" (Chen, 2017; Du, 2015).

Figure 14 Kite-making process-string tie

Hanging footlines will largely affect the quality of kite flying. The so-called foot line is the root baseline tied to the body of the kite, which can play a role in adjusting the kite's angle of approach (forward inclination). The length, position, and number of

[29] Often used for sewing clothes, the string is suitable for flying small kites.
[30] Three strands of cotton line, the most commonly used kite line in folklore.
[31] Silk threads are called "silk threads" for the thin ones and "silk ropes" for the thick ones.
[32] Thicker and stronger rope, once upon a time folk use this line to enlarge kites.

lines are not determined by personal preference but have a great deal to do with the size and structure of the kite. This wealth of kite techniques and knowledge is deep in the minds of the craftsmen, and although they do not know the scientific theories of physics and geometry, they have synthesized a body of knowledge adapted to life based on their own experience. The words "by feeling", "by experience", and "measuring by eye and hand", which are constantly mentioned by kite craftsmen, are a reflection of the local wisdom.

2.4.4 Intersection of Folk Art: The Relationship between Kites and New Year's Paintings

Weifang Yangjiabu kites and New Year paintings have a close relationship, both are traditional folk art in the Yangjiabu area, the production techniques and aesthetics echo each other, and together they constitute the traditional folk art culture of Yangjiabu. As we all know, Weifang Yangjiabu is the origin of woodblock prints, to expand production, many folk artists have mastered the production of woodblock prints and kites at the same time, due to the similarity of the production process, the kites and paintings can be said to be a pair of blood relations of the "good sister". Yangjiabu in Weifang is one of the three major production areas of New Year paintings, and the combination of woodblock printing and hand-painting is the production method unique to kite patterns in Weifang, which is mainly found in Yangjiabu area of Weifang. In addition to the frames especially needed for kite production, the printing and processing of kite patterns mostly adopt the printing and painting method of woodblock prints. That is to say, the color drafts or paintings are first carved into wooden boards, then printed accordingly, and finally, the details are perfected by hand painting, which is called half-printing and half-painting. The artistic characteristics of Yangjiabu woodblock prints are complete composition, rich in decorative, exaggerated shape, concise lines, rough and simple, strong contrast, upright and smooth, and full of colors. The traditional Weifang kites are extremely similar to the style of woodblock prints in drawing, and these characteristics are also very obvious in the kites of Yangjiabu in Weifang, especially in the drawing, which draws on the characteristics of the Yangjiabu woodblock prints of big red and big green, and the kites are drawn with pigments using the same pigment as those of the woodblock prints. The pigments used for painting the kites are magenta, magenta green, magenta blue, magenta yellow magenta purple, etc. The colors of ultramarine green and yellow, white, and big red constitute the contrasting hues. In the compositional layout, major color blocks are thickly painted, producing a warm and bright artistic atmosphere.

Figure 15 Wooden printing plates and Yangjiabu woodblock prints

Especially from the Qing Dynasty onwards, the popularization of the flourishing Yangjiabu woodblock print production industry provided conditions for the painting of folk kites, and folk artists transplanted the craft of woodblock prints to kites, and even mounted and glued the readymade prints directly on kites according to the kites' outlines, which formed distinctive artistic characteristics. The formation of this kind of folk traditional painting style has a direct relationship with the Weifang folk paintings, which are suitable for both distant and near views. There is another outstanding feature of Weifang kites in terms of painting, which is the combination of painting and tying, which achieves the effect of "Hanging on the wall is a New Year's painting, and putting it in the sky is a kite", which precisely describes the special spatial viewing effect of Weifang kites. It precisely describes the special spatial ornamental effect of Weifang kites.

To sum up, the influence of Weifang Yangjiabu kites on New Year's paintings is mainly reflected in the pattern and color, production technology, and cultural connotation. Weifang Yangjiabu kites and New Year paintings are interrelated and influenced by each other. Both are representatives of the traditional culture of Yangjiabu, reflecting the wisdom and creativity of the local people.

2.5 The Development of Kites in Yangjiabu, Weifang, Shandong Province

Every city area has its cultural lineage, which is not only an important symbol to distinguish each other but also the common spiritual roots and souls of the people living here. Weifang is the birthplace of kites in the world, Weifang is also known as Weidu and Kite Capital, with a long history of making kites and exquisite craftsmanship. Weifang kites are the traditional handicraft treasures of Weifang, Shandong Province, the traditional folk festival cultural practices, are one of the intangible cultural heritage. Now more than 70% of the kites in the world are exported from Weifang. Weifang, anciently known as Weixian County, has a long history and

splendid culture, developed traditional handicrafts and deep cultural deposits. Weifang culture is an important part of Qilu culture, but also has its characteristics, as early as in the Ming and Qing dynasties to "200 red furnaces, 3,000 smashing coppersmiths, 9,000 embroidery women, 100,000 looms," famous for the world, known as "South Suzhou, North Weifang," the reputation. 2006 May, the Weifang Kite Festival was held in Weifang, the city of Weifang. In May 2006, Weifang kites were listed in the first batch of the National Intangible Cultural Heritage list.[33] "The meeting headquarters of the International Kite Federation[34] is also set in Weifang. Now Weifang has become the center of world kite culture exchange and is called the hometown of kites by people all over the world. Kite culture gathers the wisdom of the laboring people, is produced to meet the needs of their own social life, contains national culture and national spirit, and has profound artistic and aesthetic values. The emergence of any culture is not a sudden event, but the result of a long practical historical development. The theory and research methodology of cultural ecology suggests that we should take into account the entire social and cultural ecological environment of the time, including geography, politics, ecology, culture, and other aspects, to explore the reasons for the emergence of things and the process of development.

2.5.1 Kites are the Product of Human Innovation and Practice

Weifang County is the former name of the city of Weifang in present-day Shandong Province. Specialties include kites and New Year paintings, which are famous at home and abroad. Since ancient times, Weifang County has been a famous city in the North Sea, with a thriving literary style and successive successes in the imperial examinations. Economic prosperity, during the Qianlong period, there was a "South Suzhou, North Weifang", Weifang kites can be traced back to the great thinker of the State of Lu, Mo Zhai made the first "wooden kite", so far there were more than 2,000 years of history, but began to flourish, to the people is in the However, it was in the Ming Dynasty that it began to flourish and become popular. In the middle of the Qing Dynasty, folk artists specialized in kite making began to appear in Weifang. In Weifang County, there are a lot of kite artists along the coast of Bailang River[35] making kites, that are novel and good-looking, take off high and stable, and are famous far and near. Year after year, there are folk or government-organized kite competitions, and even many foreign kite vendors and kite artists also come to Weifang. This is the origin of Weifang kites in Weifang City, Weifang City Bai

[33] The State Council of the People's Republic of China approved the naming of the first national list of intangible cultural heritage in 2006.

[34] The International Kiteboarding Federation (IKF), abbreviated as "IKF", is an international association registered with the Ministry of Civil Affairs and established on April 1, 1989 in Weifang, China. There are 16 member countries and 67 member states, and the seat of the secretariat is Weifang City, Shandong Province.

[35] Also known as the White Wolf River, Bohai Sea Laizhou Bay alone into the Haihe River. Originated in Shandong Province Changle County Tangyu town beat the mountain, flowing through Changle, Weicheng, Hanting 3 counties and districts, in Hanting Yangzi town into the Laizhou Bay, 127 kilometers long, with a watershed area of 1237 square kilometers.

Langhe's large collection[36] of prototypes. Just as language, dance, and other art forms are usually interpreted as products of imitation of natural social phenomena, kites are "analogs" created by elite or special people who simulate natural things or phenomena that dance with the wind, and fly with the wind with the help of their ingenuity and inspiration, because they conform to and satisfy the needs of most people for entertainment and games. Because it meets and satisfies the needs of the majority of people for entertainment and games, it has been circulated and spread among the general public. Further, individual and collective wisdom re-creation is the main reason for the formation of all kinds of folklore, including kites. A newborn folk thing from birth is to be accepted by the majority of people until it becomes a fixed pattern of life, not overnight, there is always a process from recognition to acceptance and then stereotyped as a customary habitual system. Kite flying is also the same, there is also a long process of experimentation - generation - recognition - development, and perfection. To a certain extent, the custom of kite flying is a folk cultural inheritance phenomenon accumulated by human society over a long period, and it is a life pattern agreed upon by the group society. It is the result of combining the material life and spiritual life of the common people and the inevitable product of adapting to the requirements of both. Although kite-flying folklore is a "non-dominant mode of life" in the cultural life of the common people, its long history has proved that it plays an important folk function in the life of the common people, as well as the value of inheritance (Zhang, 2015).

2.5.2 The Original Kites of Yangjiabu, Weifang, Shandong Province

Kites have a history of more than 2,000 years in China. In the South, they are called "harriers", while in the North, they are called "paper kites", which is why they are also called "southern harriers and northern kites". The word "kite" first appeared in the Five Dynasties (907-960 A.D.), and Chen Yi of the Ming Dynasty recorded in his "Inquiries and Ruminants" that "At the beginning of the Five Dynasties, Li Ye made a paper kite in the palace, which was used as a play for the fuse to ride the wind. Later, Li Ye made a bamboo flute at the head of the kite, so that the wind would enter the bamboo and the sound would be like a kite, hence the name "kite." Since then, the word "kite" has been used until now. In the long history of kites, a unique folk culture has been formed. There are various types of kites, which are mainly divided by structure, shape, size, and function. Beijing, Tianjin, Nantong of Jiangsu Province, and Weifang of Shandong Province are known as the four major production areas of Chinese kites. Although the history of kites is long, as a folk art object, it was not only unappreciated in ancient China like other folk arts, but also often neglected among the many folk art objects because they were regarded as a child's plaything. Therefore, the study of kites is relatively little. In ancient times, there were only two kite atlases in

[36] Also known as bazaar. It refers to the form of commodity trading activities that take place in regular gatherings. Mainly refers to a form of trade organization that prevailed in times and regions where the commodity economy was not well developed.

China: one was the Xuanhe Kite Atlas by Emperor Huizong[37] of the Southern Song Dynasty, which was still seen in the Republic of China but has now been lost. The second is Cao Xueqin's[38] Kaogongzhi of the Southern Crane and Northern Ying, which Kong Xiangze and others copied from the Japanese. The research on the origin of kites is difficult due to the lack of historical objects as well as informative historical data, and so far there is no conclusion, generally, there are five kinds of statements.

2.5.2.1 Modeling leaves and hats

Bucket hats are an ancient rainproof and heatproof instrument, which began to be used when mankind switched from fishing and hunting to farming and agriculture. At that time, the hats were very simple to make, and the ties were made from local materials, mostly from soft bark fibers. Farmers working in the field, occasionally blown off by the wind bucket hats, rushed to grab the tie rope, and bucket hats would fly up. This phenomenon inspired the invention of kites. Leaves are said to come from the southern part of China. It is said that in ancient times, people admired the phenomenon of leaves flying all over the sky in the wind, so they used hemp ropes to bolt leaves and play with them, which gradually evolved into kite-flying activities. The Gaoshan people of Taiwan and the Li people of Hainan Island used the leaves of breadfruit trees to make kites earlier. Although it seems to be too casual as a joke, it is not unreasonable to say that hats and leaves are used to fly kites. Because in many ancient scientific and technological invention process exists in this case, some kind of simple hints or some kind of weak revelation of the idea, it is likely to promote a series of development of something, to create, evolve into a completely new thing, but with the original cause is completely unrelated. In the beginning, when man-made things to satisfy the needs of life, they were necessarily very simple imitations of natural objects.

2.5.2.2 Modeling flags

Bird Flag refers to the ancient bird-printed flag. According to this theory, the oldest and most primitive kite in China is a kind of cloth kite called "phoenix scarf", which was originally written as "pennant", as recorded in "Poetry - Xiao Ya - June". Xiaoya - June" recorded "Weaving text and birds, white pennants," meaning that the pennants were woven with birds on them. This means that the pennant is woven with bird motifs and has a bright white swallow-tailed ribbon. The Book of Rites - Qu Li records that in ancient times, the military used flags as a call to arms. "When there is water in front, it carries a green flag; when there is dust in front, it carries a sounding kite; when there is a vehicle or rider in front, it carries a fly; when there is a sergeant or teacher in front, it carries a tiger's skin; when there is a beloved beast in front, it

[37] Song Huizong Zhao Ji (November 2, 1082 - June 4, 1135), known as Master Xuanhe, was the eighth emperor of the Song Dynasty and a painter and calligrapher. He was successively titled King of Suining and King of Duan.
[38] Cao Xueqin (1715 - 1763) was known as James, Meng Ruan, Xueqin, also known as Qinpu and Qinxi. His ancestral home was Liaoyang. He was a novelist, poet and painter in the Qing Dynasty. Grandson of Cao Yin.

carries a bravado." The meaning is that when marching there is water in front of you, that is to say, the flag painted with the water bird green finch is raised high, and the wind in front of you is raised high with the flag painted with the song kite, and the car rider found in front of you is raised high with the flag painted with the flying geese. Here the kite flag is specialized in reporting the wind. The kite is a kite with an open mouth. In ancient times, the Yue people used the kite as the god of wind and it was rumored that if the kite chirped, the wind would be born, so the kite flag was painted with the image of the god of wind. This kind of flag can be seen in ancient city towers, shipmasts, bridges, palaces, and other places. The appearance of kites was inspired by the kite flag.

2.5.2.3 Modeling sails, tents

This view is that kites were invented by the inspiration of sails. Sail is a device that pushes the boat forward with the help of wind power, and its principle is similar to that of the kite, and the unearthed artifacts in recent years have proved that the history of the Chinese people using boats to navigate on the water can be traced back to 7,000 years ago, and the history of the use of sail is also at least 3,000 years old. People can imitate the principle of sails and make kites to fly for fun over a long period. The tent theory attributes the origin of kites to the revelation that the winds in northern China lifted the tents.

2.5.2.4 Modeling bird

Historically, kites were named after flying birds, such as "kite" and "harrier", and the state of kites flying at high altitudes was very similar to that of the flying birds, together with the ancient people's worship of birds, some experts and scholars who studied kites speculated that kites were very probably is the simulation of early human creation of flying birds. From the current historical records and the discovery of ancient kites, one of the outstanding features of their structure, shape, and tying technology is that they are mostly in the shape of birds, thus the first kites were inspired by birds, imitating the shape of birds and named after birds. As stated in the promotional material of an American science education movie "Wing Quest", "The earliest Chinese kite was the first successful flying machine invented by human beings observing the flight of animals." There is quite a bit of truth in this statement. First of all, in the age of barbarism, birds were worshipped as the totems of many tribes. In the civilized age, flying birds also contained more auspicious meanings, many people in the world still put a certain kind of bird as the symbol of their nation. Such as the United States of America's white-headed eagle, India's blue peacock, Japan's green pheasant, Sweden's crow, Australia's lyrebird, and so on. In nature, birds and human beings live together, and people admire birds and envy them for their ability to spread their wings and soar, thus simulating birds, and kites came into being. Moreover, kites were once called "kites" in the north and "harriers" in the south, but in

the real biological world, no matter whether "kites" or "harriers" is a kind of good at flying. In the real biological world, both "kite" and "harrier" are a kind of raptor that is good at flying. Kite, also known as the black kite, eagle, harrier hawk, and other common in northern China, often alone in high-altitude flight fast and powerful, sometimes in the high-altitude soaring, will be two wings stretched out immobile hanging in the air, so in the countryside, people often take advantage of this feature, the warbler carcass or imitation of the model hung on the high fence, used to scare the sparrows and other birds that come to the field to steal food. There are many varieties of harriers, but most of them like to inhabit the rivers, lakes, marshes, reed ponds, and other open waters and their vicinity in the low mountain plains, so they are commonly found in the southern provinces of China, and they raise their wings into a shallow "V" shape when they fly, and they glide slowly over the ground for a long time, and they sometimes flutter their wings several times during this period to show a drumming flight. Accordingly, it is very reasonable to make kites inspired by real-life birds and name them after birds.

The famous ancient Chinese philosopher Mo Zhai (468-376 B.C.) lived in Lushan (southwest of present-day Weifang and Qingzhou, Shandong Province) when he "chopped wood for harriers for three years and became, flying one day and failed". The "wooden crane" crafted by Mozi may be the earliest attempt to make kites in China. Later, Mozai passed the method of making a wooden harrier to his student Gong 输班 (also known as Lu 般, Lu Ban), Gong 输班 and improved, with bamboo as the material made of "bamboo magpie", can fly in the air for three days. Kung Fu Ban also "made a wooden kite to spy on the city of Song" and used kites for military purposes. Early kites were also used to transmit messages and measure wind power. According to the record of the "unique record", Taiqing[39] three years(549 AD) Emperor Wu of Liang was trapped by the rebel Hou Jing in the city of Taichung near Nanjing, Jane female offered a plan to make a paper kite to hide the edicts in the air to send a letter to seek reinforcements, because the kite was shot down by the enemy and did not bear fruit.

2.5.2.5 Modeling archery

Eagle shooting is a way for hunters to use a short arrow called a "Zeng", which has a raw silk rope attached to it called a "jiao", and a piece of stone tied to the end of the rope called a "provide". When the hunter hits a bird, he or she recovers the rope. This way of hunting may have inspired the creation of kites.

Since people's production and life patterns are different in different regions, it is possible that people in different regions were inspired by different objects mentioned above to invent kites, therefore, the above statements have their truths, and perhaps the different statements about the origins of kites in different regions themselves

[39] Taiqing (April 547-December 549) was the seventh reign name of Emperor Xiao Yan of Liang Wu Di, totaling more than two years. In May of the third year of Taiqing, Emperor Jianwen Xiao Gang assumed the throne and used it.

indicate the reality that the art of kites has a long history and is widely distributed. When the ability of human beings to know and grasp nature develops to a certain level, people see the flying of leaves and hats, the fluttering of sails and flags, and the flying of birds in their daily lives, and then they start to fantasize that they can fly in the sky like the birds, and the legends of Chang'e to run to the moon, the Eight Immortals to cross the sea, and Lei Zhenzi[40] that can fly, etc., are all the reflections of the fantasies of people flying in the sky. It is this fantasy that inspires the infinite creativity of human beings, and under the inspiration of various objects in the natural world, kites are finally able to soar into the sky. Therefore the denial of any one of these statements may mean an unforgivable mistake. The only thing that can be affirmed here is that the origin of kites is closely related to the revelation of nature to human beings, and in this sense, kites originate from human life and social practice from the dream of human beings to fly up to the sky.

2.5.3 The Succeeding Ecology of Kites in Yangjiabu, Weifang, Shandong Province

During the feudal society period, especially with the improvement and popularization of papermaking in the Tang and Song dynasties, kite making was changed to paper sticking, the production cost was reduced and the production process was greatly simplified, which made kites quickly spread to the folk and became the toys for people's leisure and recreation, and replaced it with its recreational and symbolic functions. The reason why kites can take root, blossom, and bear fruits in the Weifang area is inseparable from the general environment suitable for the growth of kites in the Weifang area. This environment refers to both the local natural geographical environment and the humanistic and psychological environment.

The progress of the times makes the role of kites change. In history, the use of kites has been transformed many times, and its initial function is said to be for military use, which has been mentioned in many historical materials. Han general Han Xin once flew a kite into the air to calculate the distance to the Weiyang Palace[41] based on the length of the kite's flying line. In the history books, it was once recorded that in 559 A.D., Emperor Wenxuan of Qi[42] ordered the prisoners to take the kites and fly down from the eight zhang (about 26 meters high, 12 meters high in the present-day ruined platform) high Jinfengdai, and those who were able to fly out of the city could be pardoned for their deaths. Prisoners were eager to survive, "each by paper owl to fly". As a result, one of the death row inmates Huangtou succeeded in gliding on a kite and floated safely to a place called Zimo outside the city, but was later

[40] Chang'e, the Eight Immortals, and Lei Zhenzi are all characters from traditional Chinese mythology.

[41] Weiyang Palace, the main palace of the great dynasty of the Western Han Empire, the political center and national symbol of the Han Dynasty, was built in the seventh year of Emperor Gaozu of the Han Dynasty (200 B.C.), and has become synonymous with the Han Palace in the poetry of later generations.

[42] Gao Yang (526 - November 25, 559), Emperor Wenxuan of Northern Qi (北齐文宣帝高洋) (526 - November 25, 559), courtesy name Zijin (子進), born in Jinyang (晋阳), nickname Jinyang Le (晋阳乐), was the founding Emperor of Northern Qi.

arrested and died of starvation in prison (see Northern History Volume 19 of the Sixth King of Xianwen's Biography).

According to historical records, Weifang kites have never ceased to exist since their birth, and have experienced a process from vulgarity to elegance, from elegance to vulgarity, elegance and vulgarity, and complement each other in the development from the initial sprout to the subsequent thousands of years. At the same time, the improvement and development of papermaking promoted the development of kites to a great extent, and the use of kites in the military continued until the Tang Dynasty, with a history of nearly six hundred years. However, the long-term prosperity and stability of economic and cultural life in the Tang Dynasty had already made a great change in the functional role of kites and popular democracy, transforming the military behavior of the upper class into the game and entertainment custom of the whole popular democracy.

In the Tang Dynasty, kites were used as a communication tool to transmit military information. During this period, the production skills and flying level of kites reached a high level, and it was said that Zhang's multitudinous kites could fly hundreds of meters high, which showed that the flying level and effect of kites were very remarkable.

Tang and Song Dynastys were an important period in China's history with high prosperity and stability in social economy and culture, the world leader in culture science, and technology, the steady development of social economy, the people lived and worked in peace and contentment, and the people's demand for spiritual activities increased day by day, which reflected to the secular life was the increase in demand for games and entertainment, and the rise of the urban culture and the city commercial culture, which, to a certain extent, contributed to the prosperity and development and cultural change of the folk art and amusement activities, including the kites. This, to a certain extent, promoted the prosperity and development of folk arts and amusement activities, including kites, and even cultural changes. Urban folklore and market culture were rich and colorful, and the hooks and tiles prepared a special place for artists to show their talents and develop their skills, so kites and other kinds of folk art and folklore not only had a broad mass base but also gained a broad stage or space for development. In addition, the paper-making industry was developed, and the inexpensive paper provided the cheap cost of making kites, which laid the material foundation for the popularization of kite customs in society. During the Tang Dynasty, kite making in Weifang was quite common, and kite flying also became a very active game folklore among the people, especially the children's enthusiastic recreational activities. As "Shouguang County Zhi" twenty volumes of the Qing Jiaqing five-year carved book contained in February, the children's generation of bamboo for the tire, sticking as a paper warbler-shaped, butterfly and other shapes and so on, tied to a long

line put in the air. In 713 AD, the Tang Xuanjun Li Longji[43] had in Shandong Penglai Palace Yichun Yuan to watch the "Eight Immortals across the Sea" kite flying.

Meanwhile, festival activities gradually increased with the improvement of living standards. Kites adapted to the objective needs of the times and randomly entered the festival activities, melting into the festival customs of trekking and picnicking at Qingming Festival and becoming popular for a while. This is the decision of the characteristics of the kite-flying activity itself, and also the result of the choice of the needs of the common people's life. Since then, kite flying has become an indispensable folklore activity for the common people before and after the Qingming Festival, and has been gradually improved with the advance of the times. The Ming and Qing dynasties are the heyday of Chinese kites, and the Weifang kites have reached their peak. There were many kite stores in and around Weifang County, and more than ten professional kite stores represented by Tang Family Kites, which were Zhang Family Kites, Guo Family Kites, Hu Family Kites, Yang Family Kites, Yang Family Kites, Han Family Kites, Sun Family Kites and so on. A large kite specialty market has been formed in the old Bailang River beach, and many foreign merchants gather here to complete large kite transactions.

Kites from the Tang Dynasty slowly evolved into a kind of toy for people, and the Tang Dynasty was also an important period for the comprehensive development of economy and culture in ancient China, economic prosperity, comprehensive development of industry and commerce, and social stability, which brought about the prevalence of traditional Chinese festivals and thus promoted the development of a variety of cultural and recreational activities, and the different utilities of kites from the military to the Qingming Holiday have also been gradually changed, and kites, as a kind of recreational projects, slowly The kite as an entertainment item changed its role.

In the middle of the Tang Dynasty, with the transformation of the function of kites, their shape, color, and structure also changed, and paper was slowly replaced by thin and light materials in the scope of application, and hieroglyphic kites and kites with rattles appeared in this period as well. In the late Tang Dynasty, kites entered the court and became one of the many entertainment programs in the court, and the court kites also promoted the development of folk kites. According to the epic record, people in Tang Dynasty still called kites "paper kites". In the Song Dynasty, due to the participation of emperors and literati, kite flying became a very popular recreational sport, and the kites also changed and improved significantly in rolling, decoration, variety, and function. Down to the people and children, kites became their toys.

During the Song Dynasty, the prosperity of urban culture and economy, the promotion of traditional festival customs, and the prosperous development of folk

[43] Li Longji, Emperor Xuanzong of Tang (September 8, 685 - May 3, 762), grandson of Tang Emperor Li Zhi (李治) and Wu Zetian (武则天), third son of Tang Emperor Li Dan (李旦) of Tang Dynasty (唐睿宗), therefore also known as Li Sanlang (李三郎), mother of Dou Defei (窦德妃), was the longest reigning emperor of the Tang Dynasty.

handicrafts all became good conditions for the development and popularization of kites, which were more widely spread. In the Song Dynasty, Weifang kites continued to develop and improve based on the prosperity of the Tang Dynasty, and the custom of kite-flying also became a living subject for the literati to engage in literary and artistic creation. Tang and Song Dynasty was a period of prosperity and development of kites, and it was a period of great variation from art forms to functions and roles, that is, the kites were transformed from practical to recreational, and transformed from military behavior of the upper class to the stereotyped period of popular amusement folklore at all levels of society, and the reasons for this were manifold. With the popularization of kites, some scholars began to study kites at this time. Painters also used kite flying as a theme for artistic creation. Because of the participation of the literati, the hieroglyphic kites had a great development in tying and decoration. At that time, kites had become common toys for children. Children's kite-flying had become a scene in the countryside in spring. Meanwhile, due to the demand for kites in society, making kites became a specialized occupation. In addition, there also appeared a kind of professional who specialized in flying kites, "Kite Flyer". At that time, many painters were happy to take the theme of kite flying into their paintings. In addition, during the Song Dynasty, many painters also liked to incorporate kite-flying themes into their paintings. The painting "Hundred Sons" by Su Hanshen, an imperial edict of the Southern Song Court Painting Academy, vividly depicts the lively scene of kite-flying in the Southern Song Dynasty. The paintings of Guo Zhongshu, a famous painter of the Song Dynasty, were very popular. Once, an official asked Guo Zhongshu to paint a scroll. He pondered for a while and put his brush to work, drawing a child with a double bun and a threaded cart at the beginning of the painting, and drawing a kite at the end of the painting, connecting it with a kite thread in the center.[44]

Figure 16 Ancient Painting "Hundred Sons"

[44] From "Pictures to See and Hear" by Song Guo Ruoxu.

During the Ming and Qing Dynasties, the kite market and stores in Weifang were quite mature. The rise of commercial cities in China and the development of handicrafts opened up new ways for kite development. In Tianjin, Weifang, Jinan, Qingdao, Nantong, Jiangsu, Guangdong, Hebei, Anhui, and some other areas, due to the popularization and development of kite-flying activities of the folk, kite specialty markets of different sizes appeared successively and kites as a kind of folk handicrafts sold well in the market.

Pei Xingchuan, a poet of the Qing Dynasty, described the kite market in Weifang as follows: "Anvil kite market is located at the east city wall, and the tourists are busy in purchasing and selecting kites, the patterns are renovated to attract customers, and the butterflies and lovebirds are in lines". Another example is "Tang Xiang's father and son were good at business, selling New Year's paintings to Yangliuqing, the store was not far from the crossroads, and they sold kites during the cold food." At that time, the lively and prosperous kite trading scene could be seen. Up to this point, Weifang kites, through generations of people's life practice and artistic innovation, have become an independent school, a self-contained system, forming a wide range of categories and a strong local flavor (Song, 2015).

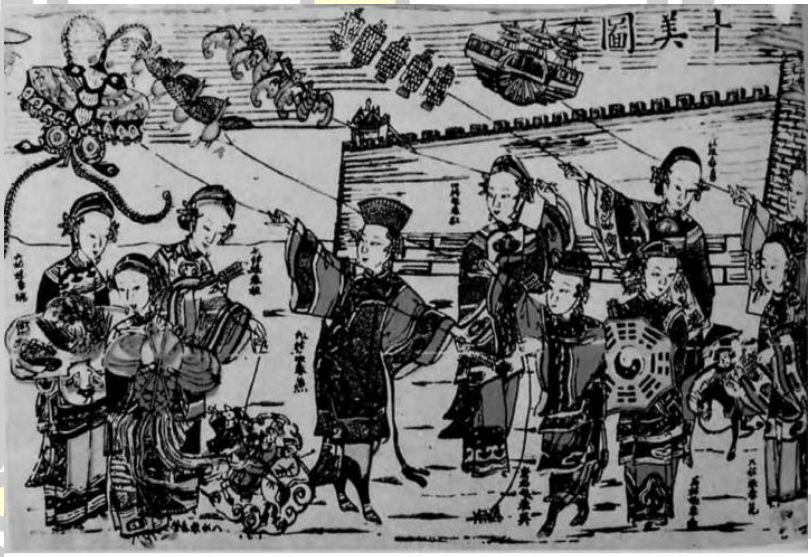

Ten Beauties Map (printed in the 33rd year of the Guangxu reign of the Qing Dynasty)

Figure 17 Yangjiabu Woodblock Prints "Ten Beautiful Pictures"

During the Qing Dynasty, one of the important activities was kite flying during the Qingming Festival. Li Yu, a famous opera singer in the early Qing Dynasty, used kites as a medium to inscribe poems on kites to express mutual love and affection, and eventually became a couple in the opera story "Kite Mistake". Since the literati joined the ranks of kites, monographs on kites have appeared. Many literati made kites with

their own hands, and they used exquisite materials, the skeleton was made of bamboo, covered with silk gauze, and then painted and decorated, which was very delicate.

During the period of Qian Jia,[45] the city's culture and economy developed rapidly, and the social situation was relatively stable, under the "Peaceful Times" kite-flying activities were prevalent and popularized and gained great development. The modeling style of each kite work in the kite atlas tends to be more realistic, realistic, or allegorical modeling, and the local deformation and exaggeration techniques are used to express the folklore mentality of people's pursuit of happiness. The decorative patterns take into account the decorative nature of the graphics and colors, and the visual effect after lifting into the air. The overall design is based on aerodynamics, the angle and strength of the wind are very delicate, the flying skills have made great progress compared with the previous ones, and it can be said that the modeling style of the kites from the Qing Dynasty has already seen the shadow of the modern kites. It is especially worth mentioning that the decorative methods of Qing Dynasty kites also had a great development, absorbing the techniques of Chinese brushwork and heavy-color painting, with natural postures of the characters, strong lines of clothes and patterns, colorful pictures, perfect characters, heavy colors, fine hooks, and fine drawings, even if they were hung in the house, they were also a work of art.

In the middle of the Qing Dynasty, Weifang began to see folk artists specializing in kite making. According to legend, there was a mute artist surnamed Chen who was famous for his innovative and beautiful kites, which were flown high and steadily. At that time, kite-flying around the Qingming Festival also became the local custom of spring trekking. According to "Weixian Zhi Zu": "This euphony every cold eclipse, outside the east gate, the beach ..... board bridge across the river, the river first pan, peach and plum spit, willow smoke contains, over the sky paper kite, high into the clouds." "Qingming, small children make paper kites, swing play, paper kites its system is not one, in the crane, swallow, butterfly, cicada all kinds of outside, and also make all kinds of characters, all Vimy Vimy, strange and clever," has done seven years of Weixian County magistrate of the great poet and calligrapher Zheng Banqiao has written such a poem to reminisce about Weixian: "Paper flowers such as snow Paper flowers like snow fly all over the sky, the delicate girl swinging to play all around, the five-color Luo skirt wind swinging, good butterfly fighting spring return", the kite characteristics of Weixian County and kite-flying customs depicted to the fullest extent. "One hundred and four days of small cold food, you step on the white wave river, paper kite son swing female, messy grass new spring swallow more", this is Weixian poet Guo Lin's true description of his hometown Qingming cold food kite flying (Liu, 2023).

[45] It means the combined name of the Qianlong and Jiaqing dynasties of the Qing Dynasty.

Figure 18 Weixian Bailanghe Beach Fair

In the Ming and Qing Dynasties, the development of Weifang kites reached its heyday. Since the age is not too far away from nowadays, there are quite a lot of documents about kites. The kites in the Ming and Qing Dynasties made great progress in size, style, tying technology, and decorative flying techniques. The decorative techniques of kites in the Ming and Qing dynasties were also richer than in the past. Kites and various folk crafts began to combine organically.

At that time, the New Year's paintings workshop also used woodblock New Year's paintings to print kite paper, and the decorative techniques and materials used by civil paper-tying artists were diversified: there were paper stickers, papier-mâché reliefs, paper cuttings, depicting gold and silver[46], and adding paper flowers and so on. Folk artists even use stickers, papier-mâché reliefs, paper cuttings, paper flowers, and other methods to tie and stick kites. In addition to making palace kites, many stores of kites were opened, making the kite market very prosperous. Weifang kites were not only sold to Yantai, Qingdao, Zibo, Jinan, and other places in the province but also sold to Fujian, Anhui, Henan, Hebei, and other places in large quantities. Weifang kites were most famous in Yangjiabu, where more than thirty painting stores were engaged in kite making in the Qianlong period, and the annual output reached tens of thousands of kites. The kites were well-made, realistically shaped, and colorful, and due to the carrying problem in selling and flying, the artists who made the kites innovated the construction of kites so that the kites could be conveniently carried by folding and disassembling, and the kites could be sold as a kind of folk handicrafts in the markets all over the world. At that time, many literati also hand-painted kites, and in addition to flying them themselves, they also gave them to their friends and considered it a very elegant thing.

Since the late Qing Dynasty to the beginning of the Republic of China, the custom of flying kites before and after Qingming has generally emerged in Weifang.

[46] It refers to the technique of using gold and silver to trace the edges when making handmade products in the old days in Yangjiabu, Weifang.

These activities have been extensively documented in various local histories. Zheng Banqiao, one of the Eight Monsters of Yangzhou[47] who served as the county magistrate in Weifang County, pictorially depicted the scene of kite-flying around Weifang during the Qingming Festival in his poem "Wyoming Weifang County": "Paper flowers like snow fly all over the sky, and the delicate women swing to play all around. Flying colored robes swing in the wind, so the butterflies fight for the return of spring." "Taigong use and rich, tube because of the hegemony, solid sea help one of the metropolises also". In the late Qing Dynasty, Weifang was famous for "200 red furnaces, 3,000 copper smiths, 9,000 embroidery women, 100,000 looms". In the Republic of China, the kite-flying custom was still very popular in Weifang, and the lead-printed copy of "Weifang County Zhi Zhi Zu Shi Folk Customs" (Volume 42, Republic of China, 30 years) recorded that kite-flying was very popular in Weifang, and "the children made paper warblers for Qingming, and swings for the play. The paper warblers were made in different ways, with cranes, swallows, butterflies, cicadas, and other kinds of characters, all of which were exquisite and marvelous. Or to reed do bow tie paper warbler on the back, the wind blowing, sound like a kite, so the name kite". The government also organized three successful kite-flying festivals at that time (Liu, 2023).

Compared to Suzhou in the south, there is the saying "Suzhou in the south, Weifang in the north", which shows the prosperity of Weifang's handicrafts. Nowadays, although Weifang has not seen the red stove coppersmith embroidery women, looms are out of sight, but Weifang's kites, the art of New Year's Paintings is the city's pride. The content of kites is rich and varied, and new styles of kites keep appearing. In some mountainous areas in northern China where transportation is inconvenient, people use various materials to tie kites locally. The production of kites in Weixian, Gaomi, Beijing, Tianjin, Jilin, and other places has become a kind of family sideline, and the number of professional production personnel has increased, and painters from all over the world have actively participated in it, so that the tying of folk kites, especially the kite painting skills have greatly improved, forming a situation where the literati painting style and the folk painting style coexisted, which makes kites not only used for recreation and flying, but also begin to go to the hall of decorative works of art, and to the world. and to the world.

After the Xinhai Revolution, under the influence of the New Culture Movement, Chinese kites took a big leap forward. Kite-making developed towards specialization, and Weixian kite-making became a kind of family side business. A large number of painters from all over the world also joined the ranks of kite-fixing and painting, which greatly improved the folk kite-fixing and painting techniques, forming the situation of the simultaneous coexistence of brushwork and heavy color, literati painting style and folk painting style represented by folk artists, and the sharing of

[47] The Eight Monsters of Yangzhou is a general term for a group of painters and calligraphers with similar styles who were active in Yangzhou from the middle of the Kangxi period to the end of the Qianlong period in the Qing Dynasty, and is often referred to as the "Yangzhou School of Painting" in art history.

professionals and non-professionals. Many kite artists and painters tied and painted high-grade kites that began as cultural artifacts in the palace, and other folk art together to the world of folk arts and culture, once became the favorite of the Panama Universal Exposition.[48]

2.5.4 The New Ecology of Kites in Yangjiabu, Weifang, Shandong Province

Since the founding of New China, with the continuous adjustment of national policies, all cultural and artistic undertakings have been developed rapidly, and kites, as one of the carriers of traditional culture, have also gained unprecedented development. Weifang kites, as an ancient and traditional folk craft folklore and amusement folklore, possessing the advantages of timing, geographical advantage, and human harmony, with the help of the spring breeze of reform and opening up, have been revitalized and energized, and have found a newer fit with the life of the common people, and its potential functions have been re-examined and explored. The special background of reform and opening up and market economy pushed kites from the region to the whole country and the whole world to become a folk culture shared by the whole country and the whole world.

After the establishment of the new China, Weifang kites, as the symbol of Weifang City, were more cherished and valued by the local people. Since 1984, Weifang has successfully organized the International Kite Festival; in January 1987, the China Kite Association was established; in 1988, Weifang was chosen as the "Kite Capital of the World" by the kite industry at home and abroad; in April 1989, approved by the State Council, the "International Wind Federation" (IWF) was founded. In April 1989, approved by the State Council, the "International Wind Federation" was established in Weifang. Weifang kites went to the world and reached its heyday. 1991, the first national kite competition was held in Weifang, Shandong Province; in 2004, the Weifang International Kite Festival was listed as the cultural heritage and folk protection project of the UNESCO Folk Art Organization; the state attaches great importance to the protection of intangible cultural heritage, and on May 20, 2006, Weifang kite-making skills were listed in the first batch of national intangible cultural heritage with the approval of the State Council. the first batch of national intangible cultural heritage (South & Daley, 2010; Sun, 2023).

[48] The first Panama-Pacific Universal Exposition in 1915 was called the Panama Universal Exposition for short, or the Panama-Pacific International Exposition of 1915.

Figure 19 The 1st Weifang International Kite Festival 1984

Figure 20 The opening ceremony of the 1984 Weifang International Kite Festival, and the "Kite Exhibition" held during the 1984 Weifang International Kite Festival to display the kites made by Weifang amateur kite enthusiasts.

In addition, "Weifang Kites" had excellent achievements in international kite and handicraft expositions and international kite competitions at home and abroad, and won countless awards and gold medals. Weifang kites were especially exhibited in the National Arts and Crafts Exhibition held in Beijing in 1956. In 1958, 200 Weifang eagle kites were snapped up by foreign merchants at the Canton Fair[49] in spring. From

[49] China Import and Export Fair, abbreviated as Canton Fair, was founded on April 25, 1957, and is held annually in Guangzhou in spring and autumn, jointly organized by the Ministry of Commerce and the People's Government of Guangdong Province, and undertaken by China Foreign Trade Center. It is a comprehensive international trade event

then on, "Weifang kites" began to go on the international stage. 1960, "Weifang kite artist Hu Jingzhu's Dragon Centipede" spread to South America and stirred up Mexico City. 1980. "Weifang kites" represented China to participate in the "World Exhibition" held in Montreat Island, Canada. In January 1982, "Weifang Kites" was exhibited in Nagoya, which was a sensation in Japan. In March 1983, Weifang kites such as "Dragon Head Centipede" and "Phoenix" took part in the Leipzig Expo in Germany, and won the "Special Prize" at the International Kite Expo in Holland in 1986, and "Weifang Kites" were exhibited in Italy and France respectively in 1990, which was a great success in Japan. In 1990, "Weifang Kites" won the "Golden Kite Prize" and "Special Prize" at the International Kite Fair in Italy and France respectively. In 1982, "Weifang Kites" won the "Golden Kite Prize" and "Special Prize" at the International Kite Fair organized by the State Ministry of Light Industry. In the "First National Kite Competition" organized by the Ministry of Light Industry of China, Weifang Kite Team was only 0.8 points behind the host Tianjin and ranked second in the country; "Weifang Kite" won the "Golden Kite Prize" and "Special Prize" in the "National Kite Invitational Competition" from the first to the fifth session. Weifang Kites" won first place in the first to the fifth "National Kite Invitational Competition", and the individual gold medals were more than six; in the first to the third "International Kite Invitational Competition", it won first place in the group twice and several individual gold medals. "Weifang kites have been highly evaluated in China, and in 1984, the international "Weifang International Kite Festival" was organized for the first time in China. Since 1984, twenty-eight consecutive international kite fairs have been successfully held; in 1988, Weifang was recommended by many countries as the "World Kite Capital"; in 1989, kite organizations from all over the world held the first congress of the International Kite Federation here, and set up the "International Kite Federation". Weifang has thus become the center of international kite culture and art exchange activities that attract the world's attention. The reputation of "Weifang Kites" at home and abroad has increased the popularity of Weifang and the content of intangible cultural heritage of "Weifang Kites", so "Weifang Kites" was listed as one of the first batches of national intangible cultural heritage in 2006. So in 2006, "Weifang kites" was listed as the first item of the first national intangible cultural heritage list of "kite-making techniques"(Yao, 2023).

พหูนํ ปณฺฑิโต ชีเว

with the longest history, the highest level, the largest scale and the most complete variety of commodities in China, and is known as "China's first exhibition".

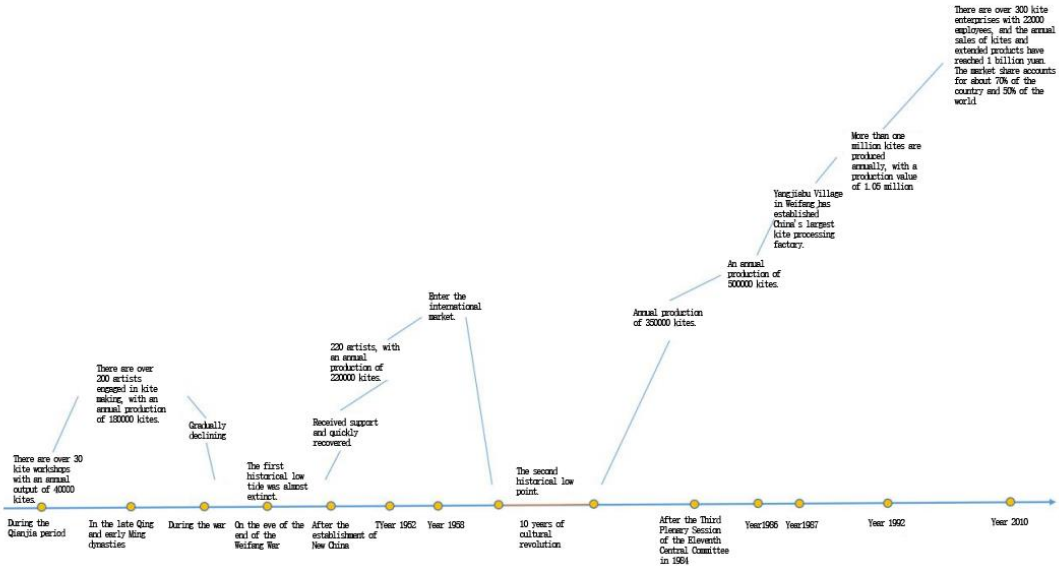

Table 3 Overview of kite development in Weifang from the end of the 18th century to the end of the 20th century

In recent years, Weifang kites have been developed and utilized as a folk cultural product and a folk cultural resource, and have entered the industrialization period. Family workshops, individual enterprises, township enterprises, and private enterprises manufacturing and producing kites have risen rapidly, and self-production and self-sale, export, and foreign exchange have become important forces in Weifang's economy. The combination of kite folk culture and economic and commercial behavior generates new economic growth points. The cultural industry of Weifang kites originates from the traditional kite commercial activities in Weifang. Weifang government departments take advantage of its own deep traditional culture and rich folk culture, take the strategic road of "cultural economy", and actively guide the development of the functions and potentials of folk culture, the kite culture shows a more attractive charm and is bound to get a wider and more lasting inheritance and circulation in the life of the common people. In modern times, Weixian County has become a famous kite-producing area and market at home and abroad, and there is a song "Bamboo Branch Lyrics"[50] which describes the pomp of the kite market at that time: "The kite market is at the east city wall, and the purchasing and selecting tourists are busy in going and purchasing, and the pattern is new to recruit patrons, and the double butterflies and kites are in rows." The kites traveled across the ocean and were brought to the United States and Japan as art treasures. In recent times, especially in the last twenty years, the kite business in China has developed greatly. Kites have begun to be popularized as a sport and a fitness and recreational activity,

[50] It is a poetic form, this Ba and Yu area folk songs, the Tang Dynasty Liu Yuxi as the turn this kind of folk songs into poetry.

and domestic and international kite flying competitions have promoted the popularity of kites as an activity. More and more people began to join in this activity. Weifang Kite Festival is a traditional Chinese festival and an important representative of Chinese traditional culture. Every year in the third month of the lunar calendar, the whole city of Weifang enters into the feverish preparation for the Weifang Kite Festival. With rich historical and cultural heritage and unique artistic charm, the Weifang Kite Festival attracts visitors from all over the country and is one of the largest and most influential kite festivals in China. It is a colorful, culturally rich, large-scale comprehensive folk cultural event that attracts hundreds of thousands of people from home and abroad to come to watch and participate. As a traditional folk cultural event in Shandong Province, the Weifang Kite Festival has become one of the most large-scale and influential cultural brands in Shandong Province (Wu, 2023). In addition, local government departments have considered the situation and formulated the policy of "kites lead the line, culture set up the stage, the economy sings"[51] to open up a thousand-mile folkloric tourism line with strong local cultural characteristics. Gaomi's paper-cutting, cloth toys, porcelain, clay figures, face sculpture, Yangjiabu's woodblock New Year's paintings, and other folk crafts such as wood carving, embedded silver in the role of the kite link to the national world to promote the development of Weifang's economic and cultural development, the world has also recognized the Weifang.

2.6 Conclude

This chapter mainly studies the contents and ways of the historical origin and cultural inheritance of Yangjiabu kites in Weifang, Shandong Province. Weifang Yangjiabu kites, through historical evolution and horizontal transmission, have gradually formed a traditional style and artistic characteristics of careful selection of materials, beautiful modeling, exquisite sticking, vivid images, colorful paintings, and flexible take-off. This is the result of growing up in a specific natural environment and humanistic background and being constantly transformed, enriched, supplemented, and perfected by the community of common people living in this context. The reason why kites can take root, blossom, and bear fruits in Weifang is inseparable from the general environment suitable for the growth of kites in Weifang. This environment refers to both the local natural geographical environment and the humanistic and psychological environment and other factors. In addition, Weifang kite is a folk culture inheritance phenomenon accumulated by human society over a long period, and it is a life pattern agreed upon by the group society. It is the result of combining the material life and spiritual life of the common people, and the inevitable product of

[51] This refers to the development strategy launched by the government of Weifang, Shandong Province, to link the folk culture as well as the tourism economy.

adapting to the requirements of both. Although kite-flying folklore is a "non-dominant mode of life" in the cultural life of the common people, its long history has already proved that it plays an important folk function and inheritance value in the common people's lives. This chapter focuses on the artistic value of kites in Yangjiabu, Weifang, Shandong Province, as well as the characteristics and attributes of kites in social life. After a long period of development and innovation, Weifang kites have gradually formed unique artistic characteristics and styles, with a strong local life flavor and vivid chiaroscuro, forming strong local characteristics and unique charisma, with a strong life flavor of simple and simple. In addition, from the point of view of production skills, the unique personality of Weifang kites is concretely expressed through the four arts of "tying, painting, sticking, and releasing". The cultural ecology and social life of Yangjiabu in Weifang, Shandong Province will be discussed and studied in the following chapters.

พหูนํ ปณฺฑิโต ชีเว

CHAPTER III

The Social and Cultural Ecology of Kites in Yangjiabu, Weifang

Introduction

The content of this chapter is to elaborate on the cultural ecology of the generation and development of kites in Yangjiabu, Weifang, Shandong Province, and the related social life based on the second chapter, which can lay the foundation for the research in the fourth chapter. In this chapter, I divide it into three subsections for research and discussion. The first subsection introduces the development and relationship of Shandong Weifang Yangjiabu kite folk art in social life; the second subsection introduces the role and value of Weifang Yangjiabu kites in social life; the third subsection introduces the imbalance and balance of Shandong Weifang Yangjiabu kite cultural ecology as well as the phenomenon that Shandong Weifang Yangjiabu kite cultural ecology and social life have been changed and tries to analyze and explain.

พหูนํ ปณฺฑิโต ชีเว

3.1 The Development and Relationship of Kite Folk Art in Social Life in Yangjiabu, Weifang, Shandong Province

3.1.1 Shandong Weifang Yangjiabu Kites are the Result of People's Practice

With good weather conditions, flying the kite smoothly into the air looks very simple, but contains many mechanical principles. In the evolution of kite inheritance for generations, Weifang kite-making artists have long designed many kite shapes suitable for flying under local geographic and climatic conditions. They have learned through experiments that kites must conform to the principle of ascending mechanics and the principle of balance to fly to the sky, and kites do dynamic balance movement under the action of wind. The lifting force generated by the angle of the kite creates the necessary conditions for the kite to take off, and if the kite is to be balanced, it must also conform to the principle of balance of force, and the main improvements in modeling include "falling and floating". Under the center-symmetric flat kite, the long fluttering belt or fluttering spike makes the kite's center of gravity sink and fight against the turbulence of left and right, so that the kite achieves balance. There is also the "horizontal bar" principle, which is generally used in flat string kites, such as the "Dragon Centipede" and other kites that have transverse bars in each waist section, making the kite's combined force form the kite's symmetrical moment, which makes the kite balanced for flying.

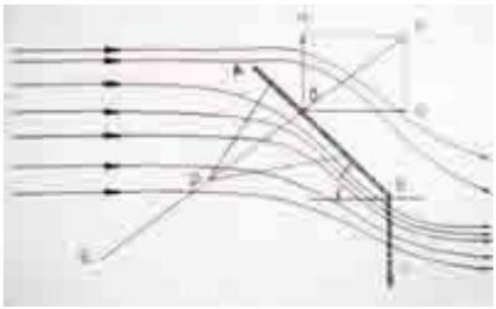

The principle of kite takeoff

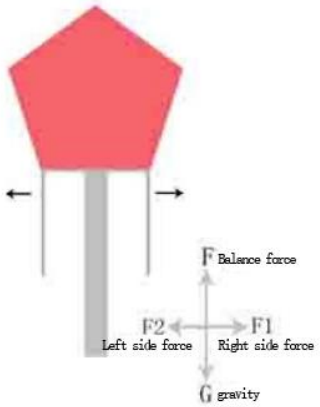

The principle of balanced force on kites

Figure 21 Principle of kite take-off

3.1.2 Refining the Interplay of Kites with Production and Lifestyle in Yangjiabu, Weifang, Shandong Province

Kite flying is closely related to people's lives, first of all, kite flying is very beneficial to people's health. According to traditional medicine, kite flyers bathe in the

sunshine and spring breeze, which has the benefit of "draining internal heat and strengthening the body." The historical book "Continued Museum Zhi"[52] also has "flying a kite, open your mouth and look up, you can drain the heat" said. Kite flying can make people cheerful and happy. When flying, the brain is highly concentrated, which will undoubtedly eliminate people's inner distractions; when flyers look up to the blue sky, their minds will also feel open. At the same time, because of breathing fresh air, exhaling the old, can promote the human body's metabolism, and improve blood circulation, get rid of winter qi and blood stagnation, get rid of the effects on health; In addition, kite flying, both eyes face the blue sky, flying kites in a variety of ways, can eliminate eye fatigue, regulate and improve visual acuity, prevention of myopia and amblyopia. Kite flying is also a brain-healthy sport, which requires total dedication. Just to deal with the relationship between kite flying and wind direction and wind speed, the flyer will have to use some brains, the external condition for kite flying is wind on the ground, but the wind speed is too big and not suitable for kite flying, because then the air is too big in horizontal direction, and the kite will not be easy to rise and it is hard to be controlled; because of the uncertainty of the wind, the kite will be easy to be "planted" down. The ancients believed that the highest state of kite flying is: holding each other when flying, a line is connected, when not flying, such as a horse lying in the trough, after flying as if into the racecourse, to be energetic, to see the line as the reins of the tightly pulled, as if taming the horse in general, and then look at the sky into the quiet, and with the drift of the front and rear run away.

Kite flying is closely related to people's lives, in addition, kite flying is a healthy and beneficial fitness activity that is also closely related to the seasons, festivals, and farming, kites are most suitable for flying in the spring and fall seasons, Ching Ming and Chung Yeung became the closest relationship with the kite season. There are numerous records of kite flying activities in these two festivals in history books, especially in local records. The combination of kites with the Qingming and Chongyang festivals, apart from objective seasonal reasons, is also closely related to the popularity of kites among the people and the increasing secularization of traditional Chinese folk festivals. The popularity of kites in the Tang Dynasty, when the use of paper became widespread, allowed kites to fully demonstrate their recreational function, and the seasonal requirements for kite flying coincided with the timing of the Ching Ming and Chung Yeung Festivals, so that kite-flying activities naturally became part of the activities of the two festivals (Xiao & Dai, 2023).

In addition, in rural areas, the custom of kite flying is also closely related to farming time[53] in terms of time. Generally speaking, in most areas of China, the farming season starts from October of the lunar year to April of the following year. However, in the tenth month of the lunar calendar, except for not much farmland

[52] The Continuation of the Museum is a ten-volume collection of ancient Chinese literary notebooks and novels.
[53] Nongshi refers to the Chinese folk practice of agricultural production, in which each crop has a certain farming time agreed upon according to the climatic conditions of the time.

management, the main work of farmers is to organize and repair farm tools in preparation for the coming year's cultivation, while some of those who are skilled in craftsmanship start their sideline production during this time. In the twelfth month of the lunar calendar, all activities are centered around the Spring Festival, cleaning, painting houses, grinding flour, killing pigs slaughtering goats, and putting up lanterns. From the first day of the first month to the fifteenth day of the first month[54], there are many more essential annual activities. So kite flying is mostly carried out after the fifteenth day of the first month. At this time, the weather is warm, the east wind is rapid, and the agricultural work is idle, the grass and trees are not yet fuzzy, the time and the site can be guaranteed, and it is the best time to fly a kite. In rural areas, kite flying is usually done in the fields. In the area of wheat planting, the wheat was to be over the Qingming before the sub-mi hair tree "Qingming to, straw called". According to agricultural experts, before the wheat is not afraid to step on, such as stepping on the words, the germination of the sprout has a certain role in promoting. But the wheat can not be stepped on, because the wheat in the points after the stalks have grown into, such as this time to the field kite, will collapse the field of bad Harvest so that the wheat yield is reduced. And in the rice production area, Qingming has been a busy season. Therefore, the kite-flying activities in the countryside generally ended around the Qingming Festival, and the latest was only until the beginning of summer (Wang & Gao, 2023).

The first and foremost condition for kite flying is wind, and theoretically, kites can be flown as long as there is wind. However, in China, kite-flying activities are mostly carried out in spring and fall, and there are quite complicated historical reasons for the formation of this traditional custom, but objectively speaking, this is not only related to the weather conditions of these two seasons such as stable winds and suitable wind size, but it also has a close relationship with the folk way of life.

3.1.3 The Relationship Between Kites and Witchcraft, Folklore and BELIEFS in Yangjiabu, Weifang, Shandong Province

Kite flying is also closely related to the local folk customs of Yangjiabu, Weifang. Customs, that is, folk customs. The word "custom" was applied earlier in China, and the word "Han Shu"[55] was: "the upper is wind, the lower is common", as the relationship between kites and folk customs is quite close, and it occupies an important position in folk activities. Although it first appeared in its original state as a flying object, since it entered the folklore, it has been widely circulated in the folklore as an entertainment toy. At this time, kites and folk life, folk beliefs, folk aesthetics, and consciousness, as well as moral sentiments are closely connected, playing the function of satisfying the spiritual life of the folklore and possessing the functions of

[54] This refers to the lunar calendar, which is the traditional calendar in force in China.
[55] The Book of Han, also known as the Book of the Former Han, is the first chronological history of China.

certain psychological support, spiritual edification, and entertainment and fitness. Therefore, from kites, we can realize that "folklore is the living expression of Chinese traditional culture and social psychology". In Weifang traditional kites, there are a lot of kites whose modeling is based on myths and legends or historical stories connected with the beliefs of ancestors and spirits, all of which are closely related to the beliefs and customs, and whose modeling is characterized by the expression of a kind of auspiciousness and good wishes, and praying for blessings and avoiding disasters has always been the typical psychological needs of the Chinese people for survival and life, and it is originated from the psychological hope of people for the natural disasters and man-made scourges which are beyond their power of conquest and which they want to resist. Psychological hope is widely and deeply penetrated in people's daily life, becomes a comforting spirit, improves fate, an important way to aspire to the good so, folk art objects are mostly manifested in the creation of auspicious art to avoid disaster as the theme of auspicious creation, "red-hot", "lively", "lucky", "lucky", "lucky", "lucky", "lucky", "lucky", "lucky", "lucky", "lucky", "lucky", "lucky" and "lucky". Therefore, the creation of folk art objects is mostly expressed as the creation of auspicious art with the theme of averting disasters and bringing good fortune. "Red-hot", "bustling", and "auspicious" constitute the charm of folk art, as well as the charm of wind art. Although not all the contents of kites express the auspicious concepts of folk art, the shadows of auspicious symbols and patterns can be seen everywhere in the traditional Chinese kites (Sun, 2023).

Number	Kite theme	primary coverage
1	Bird shaped kite	There are mainly eagles, pigeons, swallows, phoenixes, red crowned cranes, geese, etc.
2	Insect shaped kite	There are mainly dragonflies, butterflies, ladybugs, cicadas, etc.
3	Aquatic animal kites	There are mainly fish, frogs, crabs, turtles, lobsters, etc.
4	Chinese character kite	Commonly seen: “喜” “福” “寿” “禄”...Single Chinese characters and poetic phrases expressing beautiful wishes such as ″abundant grains″ and ″peace under heaven″.
5	Character Kite	There are mainly various mythological figures, historical figures, and theatrical figures. For example: Shouxing Gong, Chang'e, God of Wealth, Zhu Bajie, Sun Wukong, He Xiangu, Crane Riding Boy, etc., while the theatrical characters are mainly based on the facial makeup of each appearance.
6	Utensil Kite	For example: flower baskets, fans, clocks, cauldrons, furnaces, palace lanterns, pagodas, archways, airplanes, rockets, ships, etc.
7	Geometry Kite	For example: tiles, diamonds, triangles, Bagua rows, hexagonal stars, circles, squares, etc.
8	Plant Kite	Common ones include peaches, leaves, bamboo, lotus leaves, flowers, etc.

Table 4 Shandong Weifang Yangjiabu Kites Common Artistic Themes Classification Table

Myth is a collective oral literary creation of human childhood, an explanation, and illustration of the natural world or social phenomena observed or experienced by ancient mankind with the help of imagination, reflecting ancient mankind's desire to explain and conquer nature. It survives in civil society in the form of oral transmission and is constantly being processed, improved, renewed, and perfected among people, often combined with folk beliefs, to satisfy the spiritual needs of people from generation to generation. In the Kingdom of Kites, we can see many mythological characters and scenes, such as the female snail mending the sky, the cowherd boy and the weaving maiden, Chang'e running to the moon, saving the mother by splitting the

mountain, offering a birthday to Magu, the Eight Immortals crossing the sea, Na Zha haunting the sea, the White Queen, the Monkey King, the Eight Prefects of the Pig, and so on, the images of these myths not only live in the heavenly space of human fantasies, even if the dragons who reside in the sea are also capable of flying in the clouds and traveling in the nine skies, but also live in the human world, with the appearance of human beings and beasts, wearing human clothes, and the appearance of the animals. The appearance of a human or animal, wearing human clothes, with human character and emotions, constitutes a social relationship like human beings, so the mythological world is both fantasy, and romantic, but also realistic, material. Because of its fantasy, people have a sense of awe and admiration for it, and because of its reality, people have a sense of truth and closeness. Heaven and earth become one in the mythological world, and people's ideal wishes are realized in the mythological world. The kite has a similar temperament to the myth. On the one hand, it is made by common people who take sensual material materials, as a concrete object, it is earthly and realistic; on the other hand, it is made to satisfy human's dream of flying in the sky, and it can show its charm only in the high sky, so it has the fairy world and romantic temperament. "On the level of the unity of heaven and earth, of man and god, of matter and fantasy, of reality and romance kites and myths pluck the same string." To express the auspicious concepts of seeking survival, tending to benefit, and avoiding harm, as well as the ideals and aspirations of pursuing and glorifying a better life, the general public, through a variety of expressive methods and ways, turn some images of animals, plants, flowers, birds, artifacts and other objects in daily life, mythological and legendary characters as well as some folk proverbs into agreed-upon auspicious objects, endow them with auspicious symbols, and constitute the "one auspicious phrase, one pattern" in kite images. "one auspicious phrase, one pattern" art form (Liu, 2016).

Some scholars research, the formation of a mascot has four ways: First, the natural attributes of certain things have been appreciated by mankind's advantages, these advantages are conducive to the expression of people's desire for good luck, so the image of these things is shaped as a mascot. For example, the image of the tiger has become a good-luck charm, because the tiger is mighty and brave, is the king of beasts, is good-looking, and can be used to ward off evil spirits. The pine tree is always green, the tortoise is good at withstanding hunger and thirst, and has a long lifespan, both of which have become symbols of longevity, and are used as good luck charms to celebrate longevity. The second is due to people's imagination fictional and with the spread of myths, legends, and stories, shaping and becoming a mascot, such as spiders. Spiders this ugly bug because it has long legs and more and can weave a web out of thin air for the road, in folklore to become a good-luck charm, appeared in the "joy from the sky", "the sky in the auspicious" and other auspicious pictures as a symbol of joy. Dragon, phoenix, and unicorn are only in the myth of the survival of the animal but the dragon in the legend is portrayed as a symbol of martial arts and

power, but also by the emperor as the "emperor of virtue" and "heavenly authority" sign, become the guardian god of the nation, and phoenix and the emperor symbolizes the dignity of the dragon, become a symbol of the nobility and good luck of the empress. Empress of the noble and auspicious bird; the unicorn in the myth is portrayed as a gentle nature, gentle behavior "benevolent beast", is a symbol of auspiciousness. The third is the auspicious objects formed by the worship of spirits originating from religious beliefs (Wu, 2023). Spirit worship is also mostly based on or accompanied by myths and legends, such as the aforementioned spiders, dragons, phoenixes, and unicorns, which are deities based on nature worship. The images of gods and goddesses such as the God of Fortune, the God of Longevity, the God of Luck, the God of Wealth, the Eight Immortals, etc. became lucky objects out of traditional Chinese folk beliefs, while the images of Guanyin and Maitreya Buddha and the symbol of the word "Luck" became lucky objects as a result of the introduction of Buddhism. The fourth is the harmonic[56] symbols, which is an extremely convenient way to form mascots, resulting in the number of mascots in the number of mascots far more than any of the above three kinds of mascots. Harmony is the use of Chinese characters' monophonic single words and the characteristics of multiple meanings, through some of the same sound or the same different tone of the name of the object and some auspicious words, harmonic metaphor, so that the mood and scenery into one. The symbol is to use the things that people are more familiar with and favorite, according to their nature, image, and characteristics, to give them a kind of moral quality or auspicious meaning, so that it becomes a kind of conceptual substitute for the objective object, and becomes a symbol that everyone can agree and understand. According to the kites I have seen, the author lists the common auspicious objects formed using harmonic symbols, see the table below.

[56] Harmonization, meaning a rhetorical pattern that takes advantage of the homophonic condition of Chinese characters and replaces the word with a homophonic or near-sounding character to produce a rhetorical interest.

Mascot	Representative characters	Homophonic characters	Target auspicious language and expression forms
Bats	蝠	福、富	Fulu Shuangquan, Fulu Shou, Wufu Gongshou, Shuangfu, Fulu Dazhou (with patterns such as longevity peaches, green, copper coins, etc.)
Cats	猫	耄	Elderly and wealthy (forming a pattern together with butterflies)
Butterfly	蝶	耋	Elderly and wealthy (forming patterns with cats)
Cock	鸡、冠	吉、官	Auspicious, Lucky
Egret bitters	鹭	路	Prosperity all the way, gaining power and wealth
Crane	鹤	合	Long life for a hundred years
Fish	鱼、鲤	余、玉、礼	Years of abundance (patterned with lotus flowers), filled with gold and jade
Sheep	羊	阳、祥	San Yang Kai Tai, Jiu Yang Kai Tai, Zhong Bao Ji Xiang
Lion	狮	世、师	Five generations living together, learning from all things (forming a pattern with the character "ten thousand" and fish)
Magpie	喜	喜	Joyful eyebrows (patterned with plum blossoms)
Sparrow	家	家	Family wealth and prosperity (patterned with peonies)
Osmanthus fragrans	桂	贵	Prosperity and auspiciousness
Lotus	莲、荷	连、和	Over the years, Youyu has given birth to a noble son, and He He Ruyi has achieved great success
Gourd vine	籽、蔓	子、万	For generations to come, for generations to come
Gourd	葫芦	福禄	Fulu Shuangquan
Vase	瓶	平	Peace, Four Seasons Peace (with patterns composed of peonies, lotus, chrysanthemums, and lotus)
Green	绿	禄	Fortune, power, longevity
Peony	牡	富贵	Rich and noble, from wealthy to white headed (patterned with white headed birds and white)
Copper coins	钱	全	Rich and gorgeous
Pomegranate, grapes	子	子	Many descendants
Pine, Crane, Peach, Ganoderma lucidum	寿	寿	Longevity, a hundred years of longevity

Table 5 Common harmonic symbols of good luck in kites

As a folk art object, the kite has a close relationship with folklore and is part of local folk activities. Although it first appeared in its original form as a flying object, since it entered folklore and was widely circulated in folklore as a recreational toy, it has been intertwined with folklore life, closely linked with folklore way of life, folk beliefs, and folklore's aesthetic consciousness and moral feelings, and has played the function of satisfying folklore's spiritual life, with certain psychological support, spiritual edification, and recreational and fitness functions. Therefore, from kites, we can see one side of folk culture, and at the same time, folk culture also has a restraining effect on the themes and forms of kites (Sun, 2023).

Flying kites at Qingming is a universally popular custom. The Qing Dynasty Beijing Years and Seasons Records and Successes, written by Pan Rong-Hei,

recorded: "During the Qingming Festival, men and women would come out to the four suburbs to sweep the graves, bringing with them boxes of paper kites and spools of paper kites to offer them to the gods. Each carries a paper kite spool, and after sweeping, it is put in front of the grave to win." Ancient people also think that the wind of Qingming is very suitable for kite flying. The Qing Jia Lu said, "The wind of spring is from the bottom up, the paper kite rises because of it, so there is a "Qingming put off the harrier" of the proverbs." In the ancients, kite flying is not only a kind of recreational activity, but also a kind of witchcraft behavior: they believe that kite flying can let go of their dirty gas[57]. Flying kites means "releasing disasters", "qi", "yu"[58], "releasing calamities"[59] Or "root of disease", in short, all the bad things. As recorded in the "Wind Spectrum": "and a penned record, in the Northwest, people live in the mountains. After each session of the spring, the spring wind is tight, each village drops out in front of a huge kite, the shape rectangular, slightly convex in the middle of the situation, with a huge 100 zhang, carried to the top of the mountain, dozens of people to put it. When the kite rises, higher and higher, the group force can not win, let the kite sway and pass away, the name is said to put disaster. It is said that the disaster of the village will be put in a different place, and the whole year can enjoy peace." So many people in the Qingming Festival kite flying, will they know all the disasters and diseases are written on the paper kite, such as kite flying high, cutting the kite line, let the paper kite with the wind, symbolizing their disease, filth is let the kite away. Shandong Folklore and Witchcraft Beliefs" also cloud: "(Shandong Province) days are cloudy and rainy and not clear, people cut colors to make sweeping Qingniang hanging in front of the door, begging her to sweep away the clouds." "Since man and god are separated, and people's wishes have to be carried up to heaven, the only way to do this is to make these emblems and charms disappear from the earth, which can be done by nothing more than burning them with fire, letting them be washed away by water, or releasing them into the sky."

Kite artists in Weifang said that the old Weifang County called kite flying in spring "Flying Yu", which is a figure of "good luck". There is still this custom in the local folklore, on the day of the Qingming Festival, some people fly the board kite high and far, and then intentionally cut the kite line, so that the kite floats away with the wind, which means that the "depressed air" accumulated in a year is completely released, and it can be used to avoid getting sick in a year (Wang et al., 2022). In some places, people write their names on the kite when they encounter disasters or illnesses, cut the fuse after the kite is released into the sky, and let the kite float away with the wind, believing that they can let go of bad luck, have good luck, and eliminate disasters and take refuge. The custom of letting go of bad luck and the root of disease is also vividly depicted in Cao Xueqin's Dream of Red Mansions. This custom also affected the court, and it is said that Empress Dowager Cixi once used a

[57] Originally meaning the odor of decay and uncleanness, this article refers to something unlucky as well as bad luck.
[58] It has the meaning of blockage, occlusion, resentment, and accumulation.
[59] In this article, it means to throw away something bad.

kite to release bad luck. Because people believe that kites can take away their calamities, there are many solemn ceremonies when people fly kites. Besides, "respecting the kite like a god" means that the kite can attract good fortune, so it is regarded as a good omen that the kite can be flown smoothly without breaking the strings. If the wind is tight and heavy, the line is suddenly broken and the kite is far away, it is regarded as an omen of great evil, and the whole family will be restless all year round, even for the aversion to victory to set the solution. This wind in the Ming Dynasty." In some places, the kite is paraded in the village with a kite before flying, incense is set up at the head of the village, and the respected old man in the village leads the men in the village to hold a sacrificial ceremony, to make the kite go up to the sky smoothly, and to pray for favorable winds and rain and good harvests before the kite can be flown. In some cases, the kite is painted with a god's image or a god's horse, and an auspicious day is chosen for the "child men" to fly the kite into the sky, which is said to be able to deter earthly demons and protect the peace of a party.

Since kites are unlike things, if a kite accidentally falls into someone's house, that person's house is considered to be in bad luck, an unlucky thing, and will face a disaster. On this point, the "Kite Spectrum" also explains: "In the south, for the kite to fall into the home, it is considered a very bad thing, but for all kinds of insects and birds in the shape of the kite, it is not in the case of taboo. The most taboo is the board kite, which is thought to be enough to cause a fire if it falls at home, and not to make trouble for the work. The second is a human-shaped kite, landing home, that falls out of the sky in a person, who is thought to be the evil star into the house, the human form is a woman, it is particularly ominous, the main casualties." "There is the same situation in the north, and Xian has no such taboos against human-shaped kites. The board kite is detested by people, so there is no difference. This kind of psychological development, in my humble opinion, is probably caused by the act of releasing disasters." From this, it is forbidden to break the line or fall when flying a kite. If the kite accidentally falls on another person's house, the owner of the kite must quickly bring joss sticks, paper horses, fish, meat, and old wine to apologize to the owner, not only to burn incense and kowtow but also to offer sacrifices to the bodhisattva of the family hall before the kite can be taken away; otherwise, the owner of the house will have to tear the kite apart and burn it (Yao, 2023).

Folk artifacts, as carriers of folk culture, are often closely connected to folk beliefs, becoming the means and medium for the dissemination and transmission of folk beliefs and customs. After the invention of the kite as a flying object, its practical effect of being able to fly up to the sky was in line with the long-existing witchcraft concept of communication between humans and gods, and so the kite was combined with the idea of witchcraft and superstition and became a tool for people to express their wishes and emotions to the heavens, which profoundly revealed the concepts of folk beliefs. The combination of kites with witchcraft and superstition itself has reflected the influence of ancient beliefs and customs on kites.

3.1.4 The Relationship Between Kites and Folk Art in Yangjiabu, Weifang, Shandong Province

Folk art is the physical form of the folk culture concept, both practical and artistic, on the one hand, it is deeply rooted in people's lives and meets their material and spiritual needs, on the other hand, it is a kind of creation of beauty, which is infused with the people's own purely aesthetic feelings, reflecting the folk's aesthetic consciousness, and embodying the people's aesthetic concepts, aesthetic ideals, aesthetic tastes, and aesthetic feelings. There is a close connection between folk art objects and folk aesthetic consciousness. For thousands of years, the shapes, colors, and materials of kites have been constantly enriched and improved. Artists in Yangjiabu have organically integrated various historical allusions, myths and legends, religious beliefs, their thoughts, or their glorification or satire of real life with kites to express their different emotions (Xiao & Dai, 2023).

The Chinese folk often pretend to use artistic creation to express their real desire for life and the actual pursuit of ideals to make up for the shortcomings of real life. In this kind of aesthetic creation and aesthetic imagination, the people's wishes and dreams were spiritually and ideologically fulfilled, thus affirming the self-soothing of the spirit, and enabling them to face life with an upwardly mobile and sensible attitude. Therefore, in the creation of traditional Chinese national art objects, the selection of themes and contents emphasizes "both form and spirit", i.e., specific contents reflect the needs of people's lives and support people's ideals and emotions. Relative to other arts, "the aesthetics of folk art tends to show the principle of emotion first, a theme first" Folk printmaking artists have an art trick: "painting to have a play, a hundred to see not tired; export to be auspicious, to meet the expectations; character to be handsome, can get people happy. " "Drama" emphasizes the choice of the subject matter of folk art objects to have specific content, that is, what the folk said to "have a head", not empty; "auspicious" on the content of the emotional direction put forward more Specific requirements, reflecting the main theme of folk art objects, that is, folk art "is the art of celebrating life and the pursuit of good luck and happiness", "handsome" is the technical requirements, that is, to draw good, beautiful painting is popular. Therefore, the creation of folk art objects was characterized by the choice of themes, the penetration of emotions, and the skill of painting, and they were the medium through which the people expressed their wishes (Qi, 2022). As a folk art object, kites naturally follow this rule, and in terms of the choice of theme, content, and painting techniques, they are in line with the above-mentioned folk aesthetic requirements, which are the people's purposive and utilitarian wills.

To match the content of the kites with the "playfulness" and the expression of the emotion of "auspiciousness", the kites are deeply influenced by the folk painting tradition in terms of the painting concept and the use of colors, and the painting does

not seek for the resemblance of shape, but for the resemblance of God, which belongs to the school of subjective imagery, and it has obvious exaggerations, deformations, generalizations, syntheses, and other techniques according to the subjective emotion. They belong to the subjective imagery school, with obvious subjective emotion based on exaggerated deformation, generalization, and synthesis, as well as writing, which is modeling according to psychological concepts, and integrating unique life experience, aesthetic consciousness, and national temperament into the picture image, so that the painted image is not real, but it is more beautiful than real, and it is a sublimated re-cow beauty. For example, according to the tradition of "Zunlong" in China, Weifang kite artists absorbed the images of dragons in local woodblock prints, embroidery, and other folk arts, and made a new version of the traditional centipede kite by converting the centipede head into a dragon head, and then made the "dragon head centipede kite", which doesn't exist in real life. This artistic image does not exist in real life. People skillfully apply the image of the dragon to the string kites, and this bold creation fully proves the ingenuity and creative spirit of the artists. As the "Dragon Head Kite" is in line with the cultural psychology and aesthetic point of view of the general people from form to content, coupled with its exquisite tying craft, distinctive painting art, and the best flying effect, it is known as one of the best of the traditional kites in Weifang, which is highly praised by kite enthusiasts from home and abroad and is one of the representative works of the traditional kites in Weifang.

The use of colors in traditional kites is undoubtedly also an important aspect of folk aesthetic interest, which echoes with the content subject matter of the kites and the emotions expressed, and expresses the folk's aesthetic ideals of warmth, red-hotness, and festivity. The folk's initial understanding of color comes from nature. The regular rotation of stars and buckets, the alternation of the four seasons, the sun and moon in the morning and evening, and the reflection of heaven and earth in each other in the natural world present regular color changes. The ancestors summed up the colors of nature to obtain five basic hues, and attached to these hues: "Green, the birth is also. The color of the time of the birth of the elephant" "Red, He is also. The color of the sun also"; "yellow, shaking also. Utah shaking like daylight color also"; "white, the household is also like ice open color also"; "black, obscure also. Such as the color of the dark also." "Initially, this attachment is a purely visual, perceptual form of perception, with the formation of folk cultural concepts of good and bad luck, color has become a conceptual interpretation and symbolic than attached, such as yellow corresponds to auspicious samples, red corresponds to exorcism and festive, etc., this than attached to the folk concept of color and folk cultural concepts overlap with folk culture, the folk culture of good luck, kind of Rui, Ruyi concepts make the red-hot and warm color effect an important feature of folk art coloring (Zhang, 2017).

Folklore is the sum of cultural phenomena such as folk customs, rituals, and habits formed over a long period, which is reflected in all aspects of the daily life of ordinary people. Kites, created by the working people, are also a favorite life

companion of the general public. Therefore, kites and folklore have formed an inseparable relationship. Almost every beautiful Weifang kite carries a folk story. The excellent and rich folk myths and legends in China are the inexhaustible treasure trove of themes for Weifang kites, and various kinds of kites have also enriched and enriched the treasure trove of folk culture. The former is more profound because of the folk legend stories, and the latter is fruitful because of the kite modeling. If the story of each kite is collected and written into a book, it will be a thick work of folk literature. The association of kites with good luck can also be shown in its content. The shape of the dragon is the symbol of the Chinese nation, it is the idol worshipped by the people for thousands of years, and the descendants of the Yellow Emperor[60] are the "descendants of the dragon". The shape of the phoenix is known as the king of birds, so there is a "hundred birds towards the phoenix". Legend has it that the phoenix out of the thunder is not made, the wind and rain, the five cereals; the wind of noble character, not the spring does not drink. People have always been deeply attached to such folk forms as the dragon and the phoenix, and regard them as the most sacred deities, and the so-called "dragon and phoenix auspiciousness" means this. This spirit is also reflected in the production of kites, with the dragon centipede kite modeled in a majestic, sky-high leap, the phoenix kite modeled in a bright, colorful, and brilliant way, and even the dragon and phoenix in parallel. In addition to the dragon and phoenix kites, there is also the peacock modeling symbolizes nobility, peacock modeling kite works, exaggerated modeling, colorful, in the sky can experience the strong color changes of the kite itself, this work of artwork pattern is known as "civilization of the world", the Ming civil officials complement[61] the pattern of the second grade for the peacock, the Qing civil officials complement The second and third grades in the pattern are peacocks, so the peacock-shaped kite is a symbol of official rank and power. The shape of the crane symbolizes high purity, the shape of the dove symbolizes peace, the shape of the mandarin duck symbolizes love, and the shape of the peach symbolizes longevity. These images of animals and plants are the longest seen in kites. In the process of making kites, kite artists always send good wishes through these images (Sun, 2023).

In addition to conveying auspicious content through animal symbolism, there are also direct ways of blessing. For example, works such as "Immortal Children Offering Longevity", "Eight Immortals Celebrating Longevity", "Boys Celebrating Longevity", "Longevity Star", and "Magu Offering Longevity" all belong to the works of longevity blessing; works such as "Matching of Heavenly Rivers", "Heavenly Maiden Thinking of the World", "Liang Shanbo and Zhu Yingtai", and "Hsu Xian's Journey to the Lake" express the longing for a beautiful love; and works such as "Unicorn Delivering Sons", and "Delivering Sons to the Girls" respond to the heart's desire for

[60] Yan Huang Zi Zi Sun, is the self-proclaimed name of the Chinese people, "Yan" refers to Yan Di, "Huang" refers to the Yellow Emperor.

[61] Abbreviated as "patch", also known as "chest and back" or "official patch", is the Ming and Qing dynasties in the official dress chest or back of the fabric woven on a round or square piece of fabric. According to the official position is different, pattern form is also different. Civilian officials of the patch pattern with flying birds, military generals of the patch with beasts.

more sons in the traditional concepts of Chinese culture. The works such as "The Unicorn Delivering Children" and "The Girl Delivering Children" reflect the traditional Chinese concept of expecting more children. There is also a category of works that expresses the content of subduing demons and eliminating evils, such as "Bao Qingtian", "Zhong Kui", and "The Monkey King Subdues the Scorpion Spirit"[62], etc. Punishing evils can also bring people the gospel, and at the same time, it implies that human beings have the great power to conquer difficulties. To convey the auspicious symbols more clearly, people also introduce the shape of words into the images of kites, such as "Fortune and Prosperity", "Spring Colors in the Garden", "All Things Go Well", "The Country is prosperous and the people are at peace", "The world is peaceful", "The dragon and phoenix are auspicious", etc. are the most common words in kites. The modeling of these kites mostly pursues a high degree of compatibility between the images and the words, blending them into one. There are also the so-called "word" kites, which simply stick to the word type, and these kites mostly choose the words "longevity" and "happiness", and all kinds of expectations and wishes about good luck are concentrated into the kite picture. All kinds of expectations and wishes are concentrated in the kite picture. Some of the kites have a reasonable layout, full composition, colorful, and full of festive atmosphere, and some kites are written with the words "all things are as they should be", which are the auspicious words for celebrating the New Year in China. Some kites show a tiger holding a big carp symbolizing wealth, a pair of roosters symbolizing good luck, peonies symbolizing wealth and prosperity, and a Ruyi on the head with the words "all things are as they should be" written on it, forming a picture in the shape of "all things are as they should be" (Hao, 2023),.

Auspicious symbols and myths dynamically tell the fantastic life of ghosts and gods with the help of linguistic symbols, inducing people's fantasies and the worship of mysterious powers, and kites are the visualization of such fantasies and worship, which are perceptible and intuitive. Myths provide rich materials and interests for kites to make the world of kites look splendid and kites materially reproduce myths, diagnose and interpret the romantic imaginations of myths that arouse people's real life, and nourish people's romantic imaginations. The kites materially reproduce the myths, diagnose and interpret the myths to arouse people's romantic imagination beyond real life and nourish people's spiritual world. Besides poems and myths, kites have also left their figures in dramas, novels, and essays. Many kites are taken from operas, such as "The Legend of the White Snake" kite, "Hsu Hsien's Visit to the Lake" kite, "The Red Maiden's Passing of the Book" kite, "Wang Xiao's Catching the Foot "White Snake" kite, "Xu Xian's Visit to the Lake" kite, "The Red Queen's Passing of the Book" kite, "Wang Xiao Catching Feet" kite, "Zhao Jun's Exit from the Plateau" kite, "Yao Ji Going to the Meeting" kite and so on, all of them have a direct relationship with opera. The Yuan Dynasty dramatist Guan Hanqing's Dream of

[62] All are masterpieces of traditional Chinese literature.

Tripping Clothes and the Qing Dynasty dramatist Li Yu's The Kite Mistake, as well as the Cantonese opera Searching for the Bookstore, all use kites as a clue to plot development. Cao Xueqin's Dream of Red Mansions contains large portions of descriptions of kite flying scenes and kite poetry riddles. There are even more poems and prose on kites in modern times. Lu Xun, Liang Shiqiu and other famous writers have written prose related to kites. Lu Xun wrote the prose "Kites" and Liang Shiqiu published the prose "New Year's Eve" in Taiwan's United Daily News, in which he recalled the joyful scenes of kite-flying activities in the past.

Kite is a simple folk entertainment toy, but in the writings of the literati, it has become a carrier for all kinds of emotions, fully reflecting the tradition of expressing one's thoughts through objects and expressing one's feelings through scenery in Chinese literature. The fun, folklore, and many symbolic meanings of kites themselves have created a close connection between kites and folk literature. On the one hand, kites have become the subject matter of literature and enriched the content of literature, and on the other hand, literature has also evoked specific themes with the help of various emotions and symbols given to kites. Kites provide nutrients to literature, while literature deepens the cultural connotation of kites, both of which are mutually promoting and influencing each other.

Individual folk art does not exist alone in a certain place but is always dominated by one kind of folk art, around which many kinds of folk art objects are formed to constitute a folk art ecosystem. Weifang Yangjiabu kites and New Year paintings have a close relationship, both are traditional folk art in the Yangjiabu area, echo each other, and together constitute the traditional culture of Yangjiabu.

Yangjiabu is one of the three major production areas of Chinese folk woodblock prints. Yangjiabu New Year's Paintings are characterized by concise lines, bright colors, strong contrasts, full compositions, rich imaginations, and profound meanings, and they are famous in China and abroad for their rich local flavor and simple and distinctive artistic styles. At the end of the the Ming Dynasty, kite artists already started to integrate the New Year paintings with kites, and the craftsmen in Yangjiabu applied the drawing process and color matching of woodblock New Year paintings to the production of kites, which enriched the subject matter of kites and made them more expressive and artistically contagious.

Historically, "Weifang kites" are divided into two categories: "fine goods" and "coarse goods". "Fine goods" refers to the boutique kites made by kite artists in Weifang County (i.e. Weicheng District) for the enjoyment of officials, nobles, literati, and ink masters, while "coarse goods" refers to the commodities made by the rural areas for the entertainment of the folk people as represented by Yangjiabu, and each of the two categories of kites had their specialties. Boutique kites are delicate and elaborate from skeleton to painting, rich in style, variety, and realistic modeling, the fabrics are usually made of silk, and the paintings are mostly made by brush strokes.

Boutique kites are not only suitable for flying but also high-grade handicrafts for indoor decoration and furnishings for playing and enjoying. Commodity kites are rough and inexpensive, the fabric is usually made of New Year's painting paper, and the painting is mostly made by Yangjiabu woodblock prints, usually painted by "Pin color" of New Year's paintings, the color of which is bright and contrasting, and the kites with "Pin color" pattern have a good display effect when they are flown in the air.

Weifang Yangjiabu kites started in the late Ming Dynasty, and like Yangjiabu woodblock prints, they are the treasures of local folk art. In the process of making kites, artists skillfully integrate the elements of New Year paintings into them, forming unique shapes and styles. The patterns and colors of these kites are often borrowed from the elements of New Year's paintings. The patterns and colors of Yangjiabu kites are influenced by the New Year's paintings, with "Heavenly Officials Provide Good Fortune", "Fortune, Lust and Longevity", and "Five Sons The kites are mainly based on the beautiful and auspicious stories in the Chinese New Year paintings, such as "Heavenly Officials Give Good Fortune", "Fortune, Luck and Longevity", "The Five Sons Get to the Top", "The Unicorn Gives Sons", etc., which embody the aspiration and blessing of the laboring people for a better life. The skeleton of the kite also echoes the patterns of the New Year paintings, and both of them have similarities and differences in structure and shape. At the same time, the production of the kite skeleton is also related to the texture of the paper of the New Year's paintings, so there is also a certain connection between the two in terms of production techniques. In addition, both Yangjiabu kites and New Year paintings carry the memory of the local people's life history and culture and reflect the wisdom and creativity of the local people, so they also have similarities in cultural connotations (Liu, 2016).

Weifang kites, due to many factors in history, have naturally formed two basic style systems in painting: one is professional painters with literati painting style, which is a sign of the formation of kite painting genre since modern times, mainly painting historical stories and characters, characterized by smooth lines, rigorous composition, light tone, clear picture, and a high degree of ornamental; the other is the painters with folk traditional painting style, creating The other one is the painter with folk traditional painting style, who mainly absorbs the characteristics of Yangjiabu woodblock prints, "mostly auspicious and praying for blessings, with full compositions and rich colors, whose color drawings emphasize the same or inter-color with the original color and less use of compound colors, attaching importance to bright and vivid, pursuing contrasts, and rich in visual effects, thus having a strong local flavor". Yangjiabu of Weifang is one of the three major production areas of New Year paintings, and the artistic characteristics of Yangjiabu woodblock prints are complete composition, rich in decorative, exaggerated modeling, concise lines, rough and simple, strong contrast, upright and smooth, and full of color, and the traditional

Weifang kites are very similar to the styles of woodblock prints in terms of drawing, and these characteristics are also very obvious in the kites, especially in the drawing, which draws on the characteristics of large red and large green of the Yangjiabu woodblock prints. The pigments used for painting the kites are magenta, green, blue, yellow, purple, etc., which are used for printing the woodblock prints, and the colors of ultramarine and yellow, white, and red constitute the contrasting hues. In the composition and layout, major color blocks are thickly painted, producing a warm and bright artistic atmosphere. The styling of the characters adopts the woodblock print's technique of "stout and robust male figures and graceful female figures", highlighting the different ages and genders. Especially after the Qing Dynasty, the popularity of the Yangjiabu woodblock print production industry and Weixian city painters' drawing of god axes provided conditions for folk kite painting, and folk artists transplanted the craft of woodblock prints to kites, and even mounted and glued the readymade prints directly on kites according to the kite outlines, which formed distinctive artistic features. In addition, exquisite paper flowers are sometimes directly pasted on the kite surface, so the formation of the style of Weifang Yangjiabu kites has a direct relationship with Weifang folk art. There is Another outstanding feature of Weifang kites in painting, is the combination of painting and tying, achieving the effect of "hanging on the wall is a New Year's painting, and putting it in the sky is a kite", which precisely describes the special spatial ornamental effect of Weifang kites.

To sum up, the influence of Weifang Yangjiabu kites on New Year's paintings is mainly reflected in the patterns and colors, production techniques, and cultural connotations. These influences reflect a unique way of expression and the mutual influence of cultural symbols in traditional Chinese culture. It can be said that Weifang Yangjiabu kites and New Year paintings are interrelated and influenced by each other. Both are representatives of the traditional culture of Yangjiabu, reflecting the wisdom and creativity of the local people. Therefore, to protect and develop a certain handicraft, it is important to pay attention to the research, construction, and protection of folk art ecosystems.

3.2 The Role and Value of Weifang Yangjiabu Kites in Social Life

Shandong Weifang Yangjiabu kites have experienced the historical lineage of germination, development popularization, and prosperity under social and cultural changes. Under the review of social and cultural perspective, different social and cultural Beijing in each period is an important factor affecting the development of kite sport, and the development of kite sport is affected by different historical conditions, social and cultural influences, and the way of interaction between it and the people in different historical periods and social and cultural conditions is also different, also including the different attitudes of people towards kites in different periods and the changes of people's feelings carried by kite sport. And in the interaction with people,

it constantly enriches and improves itself, and has different roles and cultural values in different historical periods.

3.2.1 Practical Value

Mozi spent three years making the "wooden kite", not for fun, but to spy on the enemy. Since then, the role of kites in reconnaissance has been more fully utilized. Developed in 190 B.C., when Chu and Han fought each other[63], Han general Han Xin was able to use kites to measure the distance of the tunnels of Weiyang Palace when he attacked the palace. Later, the kite was also used by Han Xin to fight "heart attack". When the Han army surrounded the Chu army in Gaixia, Han Xin ordered people to make a big kite, and let Zhang Liang take the kite to fly high up in the sky and sing the Chu song loudly. The song was carried into the Chu army camp with the wind, awakening the homesickness of the soldiers, and making the army heart in great disorder. Han Xin took advantage of the situation to attack and easily defeated the Chu army (Hao, 2023).

Later, kites were developed to serve another function - communication for help. In 781 A.D., the rebel general Tian Yue besieged Lluvia, lluvia defenders Zhang struggled to resist, because of food shortage in the city, and Tian Yue's long siegdides not retreat, if you did not ask for help, we were bound to starve to death in the city. In fact, at that time, the court sent a horse Flint led by reinforcements rushed to, but because Tian Yue was be Lluvia city surrounded by water, Horse Flint couldn't probe the situation inside the city, dared not attack, and had to be stationed outside the city anxiously waiting. The people inside the city can not get out, and the reinforcements outside the city dare not come in. After thinking hard, Zhang multitudinous finally came up with a solution: to tie the letter of help to a kite and fly it out. The kite flew farther and farther away from the head of the rebels, and when Tian Yue saw that the situation was not right, he hurriedly ordered his men to take bows and arrows to shoot at the kite, but because the kite flew too high and too fast, they were not able to shoot down the kite after all. The kite fell into the camp of the reinforcements, Ma Suoi read the letter and knew the emergency in the city, so immediately launched an army attack, broke the rebel army, and lifted the crisis of Llamia City.

After the Tang and Song dynasties, with the development of the paper industry, folk began to use paper to mount sticky kites, making kites no longer a difficult thing. With the development of productive forces, people live and work in peace and contentment, society is more and more stable, and kite flying will begin to get rid of the utility of combat, and become people's favorite outdoor activities. During the Qingming Festival, people would go to the countryside in groups of three or five and

[63] The Battle of Chu and Han, also known as the War of Chu and Han, the Battle of Chu and Han, the Battle of Chu and Han, etc., i.e., from August of the First Year of the Han Dynasty (206 BC) to December of the Fifth Year of the Han Dynasty (January 202 BC), a large-scale war was fought by the two major groups of the Western Chu Dynasty, King Xiang Yu and the Han Dynasty, King Liu Bang, in order to compete for power.

fly the kites as high as possible, then use scissors to cut the silk threads in their hands, letting the kites fly far away with the wind, to let the kites take away the bad luck that had been accumulated in the past year.

The origin of kites is said to be related to witchcraft, from which people can get spiritual fulfillment and comfort. At the same time, people hoped to get close to the gods through a tool that could fly, to convey their wishes to them, and to hope that the gods would give them favors for the benefit of the earth. Therefore, the kite, which can be flown in the air, was given the mission of communicating with the gods. In addition, if someone has a disease, their name is written on the paper kite, and when the kite flies into the air, the tether is cut, which signifies that it will fly away with the wind with the disease, and people's diseases will be eliminated, which is called "releasing the root of the disease, releasing the bad luck". At the beginning of the new year, the spring breeze is vast, and letting the kites go means letting go of the calamities and diseases of the old year and the ghosts haunting the bad luck, and expressing the good wishes for the new year, which is embodied in some local chronicles, literary works, and poems. The Chinese classical masterpiece "Dream of Red Mansions" has a description of using kites to release bad luck, Zijuan picked up a big butterfly kite, and Daiyu laughed and said: "But then, we know who is releasing the bad luck, quickly fall out of the strike. We'll take ours out, and we'll put it in the air too." Daiyu couldn't bear to put the kite in her hand. Daiyu can not bear to put the hand of the kite away, Li danwei said: "Kite flying is the figure of this fun, so that put bad luck, you should put more, the root of your disease is brought to go on the good. Zijuan laughed and said: "This going to bring the root of the disease can be brought to go". In addition, other people fall kites can not be picked up, people are very taboo kites falling in their courtyard and will be quickly thrown away because this will be stained with other people's bad luck. In addition, in some areas, when flying kites, incense should be set up at the head of the village so that we can pray for good weather and good harvests in the future. Flying kites to release bad luck and pray for good fortune is just a kind of psychological comfort and a good expectation for the future. However, in the warm spring breeze, kites flying in the sky and people running on the ground with kites in their hands do have the effect of relaxing the body and mind and breaking through the siege of negative emotions. Kites are a symbol of people's pursuit of a better life. Kites directly express the people's passionate pursuit of truth, goodness, and beauty with various beautiful images. Flying kites, sends people hope for a better life, as well as conveying words from their hearts to their deceased loved ones through flying kites (Ji & Shi, 2018).

In addition, the Tang Dynasty was prosperous, and with the development of the society, kites gradually evolved into a kind of recreational toy that people loved. By the middle of the Tang Dynasty, the word "kite" gradually emerged. Weifang City has a long history of kite culture, as early as two thousand years ago, people in the Weifang area already started to watch and manufacture kites. By the Ming and Qing

Dynasties, kites had become an important form of folk entertainment in Weifang. With the development of society and the transformation of kites' functions, the shape of kites was gradually reduced, and due to the rise and wide use of paper, it became the material for making kites, and many more images and functions appeared, which made kite-flying widely popularized in the folk. In the late Tang Dynasty, kites became one of the leisure and entertainment toys in the court. The kites in this period were very delicate, the imperial nobles searched for fine products from the folk, and the shape and decoration of the kites were innovative, such as the kites in this period could not only flown in the daytime, but also the night; they were also kites with a device similar to a bamboo flute on their backs, and the kites could make a ringing sound when they were being flown. At this time, kite flying is a folklore activity of stretching the bones, and the popularization of kite flying custom, while enriching people's cultural and recreational life, is also combining and influencing each other with other folk customs, forming a distinctive folklore culture. Kites can not only carry hope but also exercise the mind and strengthen the body. In the Northern Song Dynasty, Su Hanchen's "Infant Play" vividly recorded the lifestyle of China in the 12th century, in which kite-flying scenes were depicted. During the Qing Dynasty, kite flying became more common, and the folk Chinese painting "Hundred Sons" clearly depicts the scenes of children playing and flying kites, which is also a folk custom beneficial to the body and mind. Kite flying in spring is also well-documented in medicine. Chinese medicine believes that people mostly stay indoors in winter, which accumulates internal heat in winter, and kite flying in spring can release internal heat, stretch muscles, and bones, strengthen the body, and bring many benefits to people's physiological health.

3.2.2 Literary Value

After the Tang Dynasty, kites gradually became mainly recreational. By the Song Dynasty, due to the widespread popularity of kites, kite-flying had spread among the folk, while the emperor and the literati also liked it very much, and the kites were greatly improved and developed in terms of tying, decoration, varieties, performance, etc., and became the most popular ancient "leisure toys" for all the people, from the imperial aristocrats down to the common people and even the children. It has become the most popular ancient "leisure toy" for all people. At the same time, in addition to the kites are loved by everyone in life, some scholars, painters, and poets also use kites as their creative materials in their works. For example, China as early as the Jin Dynasty64 cast kite flying activities and kites of different beautiful modeling patterns to the "Xijing official made" on the bronze mirror, as the high-grade supplies for the royal nobles. The scholar of the Song Dynasty, Gao Cheng had made a special

[64] The Jin Dynasty (1115-1234) was a feudal dynasty in Chinese history founded by the Jurchen ethnic group to rule the northern and northeastern regions of China, and was founded by Wanyan A Bongda (Wanyan Min). It shared borders with Western Xia and Mongolia in the west and confronted the Southern Song Dynasty in the south. There were ten emperors in total, and the kingdom lasted for 119 years.

examination on the history and name of kites in "Things Jiyuan". Song Dynasty Magizhou kiln-fired porcelain pillow is also painted with a "baby play kite" pattern. Ming Dynasty also had a "two children play kite" pattern burned on the blue and white bowl porcelain. There are also some painters to kite flying as a theme for artistic creation, such as the court painter Su Hanshen's "Changchun Hundred Sons", which vividly depicts the scene of kite flying in the Song Dynasty; the poet Wang Ling also made a poem of "paper kite", and Lu You's "watching the village children play on the stream" also has a poem about kite flying. As kite flying has been loved by people throughout the ages, this theme is also very easy to be accepted by society. Han Fuling made the kite of Pigsy, an image of naive and charming, Weifang Kite Museum displayed in the Liangshan one hundred and eight general kites, vivid characters, so far the number of domestic single group of kites is the first, and the kite pattern based on the characters in the literary works is especially praised by the peers. The kite depicts Lin Daiyu in a pink dress, the character portrayal is delicate, and the expression and dynamics are very vivid, accurately depicting the scene of "Daiyu burying flowers" in "Dream of Red Mansions". As our ancestors have already done so, we can completely follow the practice of the ancients and transplant the beautiful kite modeling and kite-flying art craft themes to other related handicrafts. Such crafts can not only be accepted by the market but also enrich the content and life of arts and crafts and folk culture.

Figure 22 Weifang Yangjiabu Kites

3.2.3 Artistic Value

Weifang kites, due to many factors in history, have naturally formed two basic style systems in painting: one is professional painters with literati painting style, which is a sign of the formation of the kite painting genre since modern times, mainly painting historical stories and characters, characterized by smooth lines, rigorous composition, light tone, clear picture, and a high degree of ornamental; the other is the painters with folk traditional painting style, creating The other one is the painter with folk traditional painting style, who mainly absorbs the characteristics of Yangjiabu woodblock prints, "mostly auspicious and praying for blessings, with full compositions and rich colors, whose color drawings emphasize the same or inter-color with the original color and less use of compound colors, attaching importance to

bright and vivid, pursuing contrasts, and rich in visual effects, thus having a strong vernacular flavor". Yangjiabu in Weifang is one of the three major origins of New Year paintings[65], the artistic characteristics of Yangjiabu woodblock prints are complete composition, rich in decorative, exaggerated modeling, concise lines, rough and simple, strong contrasts, upright and smooth, and full of color, the traditional Weifang kites are extremely similar to the woodblock prints in terms of their style of painting, and these characteristics are also very obvious in the kites, especially in the drawing of them, which Absorbing the characteristics of Yangjiabu woodblock prints with big red and green, the pigments used to draw the kites use magenta, magenta green, magenta blue, magenta yellow and magenta violet printed on woodblock prints, and the colors of ultramarine green and yellow, white and big red constitute a contrasting hue. In the composition and layout, major color blocks are thickly painted, producing a warm and bright artistic atmosphere. The styling of the characters adopts the woodblock print's technique of "stout and robust male figures and graceful female figures", highlighting different ages and genders. Especially after the Qing Dynasty, the popularity of the Yangjiabu woodblock print production industry and Weixian city painters' drawing of god axes provided conditions for folk kite painting, and folk artists transplanted the craft of woodblock prints to kites, and even mounted and glued ready-made New Year's paintings onto kites according to kite outlines directly, forming distinctive artistic characteristics. The formation of this kind of folk traditional painting style has a direct relationship with the Weifang folk paintings, which are suitable for both distant and near viewing. There is another outstanding feature of Weifang kites in terms of painting, which is the combination of painting and tying, which achieves the effect of "Hanging on the wall is a New Year's painting, and putting it in the sky is a kite", which precisely describes the special spatial viewing effect of Weifang kites. It precisely describes the special space-viewing effect of Weifang kites.

3.2.4 Economic Value

Along with the prosperity of kites, Weifang kites became a family member in people's economic life again and entered into circulation in the form of commodities, and gluing kites became a profession and an important livelihood. According to historical records, as early as in the Qing Dynasty, there were more than 30 kite workshops and stores in Weifang City, and there were dozens of city kite stores in the old Weifang County (Weifang City Center) Bailang River Market during the Qingming Festival, where foreign merchants were in constant flow, and business was very prosperous. From this time onwards, kites have become one of the important pillars of the local economy. With the development of the economy kite is also developing and perfecting, 1984 held the kite international kite fair, from then on

[65] The three major production areas of Chinese New Year paintings are: Taohuayu in Suzhou, Yangliuqing in Tianjin and Weifang in Shandong.

became the window for Weifang to open up to the outside world, becoming the reform since the opening of China's important international comprehensive festivals, greatly promoting the opening up of Weifang and economic development. 1984, the first Weifang International Kite Fair, Weifang City, kite enterprises of about 20, with an annual sales of more than 200,000 yuan. As of April 2022, there are 614 enterprises engaged in kite production and sales within the territory of Weifang, among which the number of kite enterprises with independent export rights is about 30. There are more than 1,000 kinds of kite styles and specifications designed and produced, employing about 80,000 people, with annual sales of kites and extended products of about 2.2 billion yuan. Domestically, Beijing, Guangzhou, Yiwu, etc. are the main marketing and distribution centers of Weifang kites, and abroad they are exported to Europe, the United States, Southeast Asia, and more than 40 countries and regions, with a share of more than 80% and 75% in the domestic and international markets respectively. The kite industry is mainly concentrated in Weifang City, in which Yangjiabu Village in Hanting District has become the main gathering place of Weifang kite industry production. Leading enterprises in the kite industry in Weifang have opened up international and domestic sales channels by introducing advanced technologies, developing new products, applying for independent export rights, and representing Weifang in international kite display and performance competitions (Hao, 2023). The kite event brought about the development of the kite industry. It made Weifang kites develop from scattered small workshops to group industrialization. Yangjiabu has developed from a single kite production and processing to a whole industry chain model integrating all kinds of kite parts processing, sales, and distribution, driving more than 50% of the villagers in the village to engage in kite tying or kite-related industries, easing the employment pressure and improving income while boosting the development of urban tourism industry and forming a good economic circular chain. Weifang "Weifang kites" as a carrier of foreign cultural and artistic exchanges, foreign propaganda and friendship, "cultural stage, economic opera" to promote Weifang's investment and reform and opening up, and promote the integration of the cultural industry and tourism development in Weifang's economic construction. It has played a positive role in the economic construction of Weifang.

3.2.5 Identification

As a local folk art as well as a cultural symbol, Weifang Yangjiabu kites represent the characteristics of local traditional culture, including aesthetic value, cultural connotation, and historical origin. The production of kites requires complicated traditional craft skills, and the inheritance and development of this traditional craft is not only a need for cultural inheritance but also an important way to improve people's handicraft levels and creativity. The process of kite making and flying requires people's cooperation and participation. By participating in kite making, people continue to improve their skills and thus continue to increase their sense of

identity and pride in traditional culture. In various activities in families and villages, people can interact by making and flying together. Nowadays, Weifang is honored as the "Kite Capital of the World" by various countries, and the headquarters of the International Kite Federation is located in the Weifang Kite Museum. As one of the traditional Chinese cultural festivals, the Weifang Kite Festival is the most famous representative festival of folk kite culture in northern China. Meanwhile, in the evolution of the Weifang Kite Festival, it has gradually formed a rich and colorful form of activities. For example, kite exhibitions, kite-making competitions, kite racing competitions, kite skill performances, and so on, attract a large number of tourists and participants. Nowadays, the Weifang Kite Festival has become one of the important cultural festivals in China, which is attended by tourists from all over the country every year. As a cultural symbol, a way of social interaction, a traditional craft, and a carrier of regional culture, kites play an important role in people's lives, and people can enhance their sense of identity and pride in their own cultural identity through the making, flying and interaction of kites, which plays an important role in the promotion of local culture as well as the advancement of identity.

3.3 Imbalance and Balance in the Cultural Ecology of Kites in Yangjiabu, Weifang, Shandong, China

Kite culture belongs to the category of folk culture, which takes the folk culture ecosystem as the environment for survival and development. The replacement of agricultural civilization by the modern industrial civilization and the violent impact of the western strong culture on the Chinese traditional culture have caused the folk culture ecosystem to undergo a profound change, and the ecological environment of the kite culture has changed accordingly. The kite craft of Yangjiabu in Weifang, Shandong Province, with its distinctive artistic and technological characteristics, changes along with the evolution of style characteristics in each historical period and region, and all of them have new situations and specific cultural connotations. Functional use is the most basic purpose of kite technology invention, and its function changes with the changes of the whole social and ecological environment, and the spiritual aesthetics brought about by artistic modeling and decoration gradually play a leading role. Chinese traditional kite art is permeated with traces of traditional folk art, and the national characteristics expressed in its connotation and spirit are the unique genes of kite culture. Cultural homogenization and the diverse and balanced view of cultural ecology have established the ecological position of kite culture for us.[66]

[66] Ecological niche is a basic concept in ecology that refers to the position a population occupies in an ecosystem, in time and space, and its functional relationships and roles with related populations.

3.3.1 Cultural Ecosystem Imbalance and Balance

An ecosystem is an ecological unit with a certain structure and function composed of living and non-living components in a certain space. An important characteristic of ecosystems is that they are self-regulating. Under normal circumstances, ecosystems will maintain their ecological equilibrium and achieve a self-calibrating homeostasis. Ecological equilibrium "refers to a stable condition achieved by ecosystems through development and regulation, which includes structural stability, functional stability, and stability of energy output and input." This ecological equilibrium is a relative equilibrium, when the input and output of material and energy of the system are close to equal, the structure and function of the ecosystem will be in a relatively stable state, and even if there is external interference, it can be restored to the original stable state through self-regulation. This ecological balance is also dynamic, the flow and circulation of material and energy of the system is always renewed, and the environment is also changing constantly. The ecosystem always evolves and develops in the direction of biological diversity, structural complexity, and functional perfection, and tends to mature and self-calibrating homeostasis. The concept of "cultural ecology" was put forward by the American school of Anthropology "cultural ecology", led by Storrs, "cultural ecology" refers to the relationship between human culture and behavior and the natural ecological environment in which they interact (Zhao, 2017). There is another layer of meaning, that is, with a concept similar to the natural ecology, to see the various parts of human culture as an interacting whole, and it is this way of interacting that makes human culture enduring and oriented to balance. The cultural ecology referred to in this paper is precisely the culture of each ethnic group with its national characteristics formed in a certain environment, which is formed after years of accumulation and has a certain regional and original ecology.

The self-regulation ability of the ecosystem is limited when the external impact or interference exceeds the self-regulation ability of the ecosystem, that is, the so-called "ecological Min value" regulation will not work. The system can not be restored to its original state and is damaged or even collapsed, the whole system into a state of imbalance. External shocks can damage the ecological balance from two aspects. First, it destroys the structure of the ecosystem, leading to a decrease in system function. The second is to cause a decline in the function of the ecosystem leading to the structural disintegration of the system (Lv, 2016).

The structure of the ecosystem can be divided into two levels. The first level is the components that make up the system, including producers, consumers, and reducers. The second level is the species within each component. When the ecosystem is in relative equilibrium, all levels of the system's structure are in a state of overall coordination and coexistence, while when the ecosystem is out of balance all levels of the system's structure are deficient and changing. Structural deficits occur when one

or several components of an ecosystem are missing, causing the system to collapse and disrupting the equilibrium. The occurrence of such a situation generally indicates that the system has been subjected to a massive shock, resulting in drastic changes to the system and a very serious ecosystem disorder. Structural change refers to a change in the structure of a component of an ecosystem, such as a decrease in species or number, or a change in the component, etc., and it can also cause ecosystem disorders. Coinciding with structural deficits and structural changes in ecosystems are changes in system function. Changes in structure inevitably lead to dysfunction in system function, and the two are closely related.

The folk culture ecosystem, as a component of the human ecosystem, although different from the natural ecosystem because people become the core element of the system, and the producers, consumers, and disseminators of folk culture are all human beings, it also follows the law of ecological equilibrium and disequilibrium of the general system as described above, which provides a theoretical basis for us to study the changes in the kite culture ecosystem and how to cope with such changes. The political, economic, and cultural changes of modern human society have brought violent impacts to the folk culture ecosystem, and the structure and function of the system have undergone significant changes, and the kite culture ecology, which takes the folk culture ecosystem as its living environment, has also changed.

3.3.2 The Imbalance of the Kite Culture Ecosystem in Yangjiabu, Weifang, Shandong, China

When a people's culture encounters interference from outside forces, it is vulnerable because of the originality of its culture, which is expressed not only in the natural environment but also in the cultural environment. The development of modern industrial civilization has brought convenience, utility, and even pleasure to people's lives, but because the focus has been mainly on the world of material production, no attention has been paid to the development of the inner world of human beings, their consciousness, and their emotions. As a result, an imbalance in the natural ecology has been created along with an imbalance in the cultural ecology. This imbalance is manifested both in the destruction of the natural ecological environment and in the changes in the way of life of the local people caused by the destruction of the environment, which in turn leads to changes in the cultural practices of the place.

3.3.2.1 Changes in heritage groups and spaces

In the agrarian economy and society, folk art exists as a supplement to the rural economy, and its inheritance space is mainly in the vast countryside, with peasants being the most solid folk art inheritance group. From the Song Dynasty onwards, with the development of cities, cities became the center of kite trading. After the Qing Dynasty, with the urban literati joining the kite-making ranks, the production of kites

also tended to gather in the cities. However, it is not until the modern industrial society, with the accelerated urbanization process, that the towns become the center of kite economic and cultural exchange activities, then become the center of kite production and sales, and the main space of kite cultural inheritance. At the same time with the wide and deep urban-rural interactions, farmers began to follow the example of city dwellers to generally accept the modern culture, and the cultural ecological environment of the countryside also changed. As Arnold Hauser said, "Folk art began to decline and disintegrate when foreign norms of interest and new values invaded their language forms. The more sophisticated art favored by the sophisticated city dwellers then replaced the traditional art of the peasants. The remaining part of the folk art will be left in the sticky memories of the old people who are about to die. Although the conservative tendencies of the peasants are serious, once they are exposed to the new way of life and find it less difficult to accept and more comfortable, their loyalty to stereotypes and old ethical concepts will quickly collapse." It can be seen that whether in the city or the countryside, the soil on which folk art, including the art of kite flying, depends may become less fertile with the changes in modern lifestyles and aesthetic sensibilities. As a result, the inheritance groups and spaces have changed.

3.3.2.2 Impact of modern technological means of production on traditional handicrafts

Large-scale machine production and the market economy are the hallmarks of modern industry, and the mass production of cheap and efficient mechanized industrial goods has impacted ancient craftsmanship. Folk art objects were indeed created early on as commodities because most of them were intended for sale and not primarily for the maker's use. "But they gradually evolved into what we understand today as 'commodities'. The key to this was the condition in which the artist generally no longer knew who his customer was, and the customer took on an impersonal nature." Although the traditional Chinese kite is an unassuming folk art object, it is quite time-consuming and laborious to make by hand. The four arts of kite making, as mentioned above, namely tying, gluing, painting, and flying, can be broken down into dozens of processes if they are further elaborated. The commercial activities of kites stimulate the social demand for kites, and the kite market expands rapidly, but the traditional handmade kites are time-consuming and laborious, with low production and high cost, especially the improvement of human capital in modern society, which increases the production cost of kites and cannot fully meet the market needs for a while. So under the stimulation of the tide of the commodity economy, to reduce cost and get better economic benefits, many kite producers gradually adopt semi-mechanical and semi-artificial production methods and simplify the production procedures, such as changing the handmade bamboo for mechanical bamboo and changing the hand-painted for the machine-printed, etc. In addition, there is also the problem of cutting corners and making good kites by second-rate, which results in the

quality of kites not being guaranteed, and not only the production is rough and not taking off. Of the four major kite-producing areas, Weifang kite market development is the earliest, the degree of commercialization is also relatively high, but in these years in the vicious circle of low-price competition, the kite quality declined seriously, has largely affected the reputation of Weifang kites.

3.3.2.3 The impact and dissolution of modern lifestyle on kite culture

Folk art is always closely connected with folk life, and it is inherited with the folk way of life from generation to generation, and the kite is no exception, it coexists with all kinds of folklore such as folk beliefs, folk festivals, folk aesthetics, and also promotes and influences each other with folk paintings, folk literature and other folk art objects, which are inherited and developed in a common cultural ecosystem. However, with the rapid development of modernization and industrialization, the impact and influence of the commodity economy and Western culture have greatly changed people's way of life, values, and aesthetic orientation, thus shaking the foundation on which the kite culture survives and is inherited. As a kind of recreational toy, the fun of kites mainly comes from flying, however, modern cities are full of skyscrapers and buildings, which lack the broad space needed for kite flying. For modern people who live a stressful life, not being able to find a suitable place to fly kites nearby has undoubtedly hindered their choice of kite flying as a form of recreation (Guo, 2023). In recent years, public leisure squares have been built in various cities one after another, but there is not much space left for kite flying. The great development of science and technology in the century has provided many new means of leisure and entertainment for human beings, television, and the Internet have taken up a lot of people's leisure time, and all kinds of modernized toys are coming out one after another, and young people are not interested in kites, which makes the inheritance of kite flying skills face difficulties. In addition, people's indifference to traditional festivals such as the Qingming Festival and Chongyang Festival has cut the relationship between kite flying and folk festivals. Folk festivals are an important way of folk culture inheritance. In recent years, traditional Chinese festivals have been increasingly neglected for two main reasons. One is the reason for the festival itself. China's traditional festivals were born based on agricultural civilization, most of them are related to the agricultural season, and the production and lifestyle of the farming society, the festival content is relatively old and monotonous and can not adapt to the requirements of modern life. The second is the impact of the strong Western culture, and increasingly favored by the general, and the kite flying activities closely linked with the seasonal activities are thus squeezed.

3.3.2.4 Shock to traditional concepts of cultural inheritance

China's commodity economy developed early but slowly because it has always been dependent on the farming economy without acquiring an independent status, and

traditional handicrafts have always existed as a side business of the agricultural family to supplement the inadequacy of the farming economy. Therefore, under the self-sufficient small farm economy, the handmade kites could be inherited from generation to generation. However, in modern times, under the pressure of large-scale commodity production and market economy, it is difficult for kite artists to survive by making traditional kites by hand, and the number of traditional kite artists is decreasing and the phenomenon of aging is serious. At the same time, modern society provides young people with a variety of career opportunities and freedom of choice. Although kite-making is a small skill, it is not easy to master without several years or even more than ten years of professional learning. Under such circumstances, it is not surprising that it is hard to find the successor of kite-making skill, even the descendants of kite-making families are not willing to engage in this profession, and the traditional way of inheritance is no longer strong. From the perspective of economic development, the replacement of agricultural civilization by industrial civilization is an inevitable trend of historical development. The change in kite culture and ecological environment is also normal, because the cultural ecological equilibrium is originally dynamic, and the change in human social life makes the system constantly spit out the old and incorporate the new, constantly adjusting its structure according to the new situation and establishing a new equilibrium, so there is no need and impossible to keep the system in the most original and stable state. However, in the face of the changed cultural ecological environment, how to pass on the traditional folk arts and culture, including traditional kites, is something that needs to be explored and practiced continuously. Effective interventions are needed to restore the balance of the whole system and to find a new state of survival for the cultural factors in the new environment so that they can be passed on and have sustainable development.

3.3.2.5 Low rate of transformation of cultural resources into cultural industries

The fundamental change in China's traditional cultural ecosystem occurred after the reform and opening up, the sudden acceleration of China's industrialization and modernization has fundamentally changed the foundation of China's small peasant economy, coupled with the increasingly frequent cultural exchanges between the East and the West, and the massive importation of strong Western culture as a group of foreign cultural species, China's traditional cultural ecosystem has been subjected to a strong foreign cultural interference, relying on the system as well as its power has been unable to regulate this interference in a state of imbalance. Depending on the system and its strength, it is unable to regulate this interference, and the traditional Chinese cultural ecosystem is in a state of imbalance, among which the folk culture ecosystem has been hit the most. Various traditional Chinese folk arts and folk skills, including kites, are rapidly dying out. Therefore, the impact of industrial civilization and the foreign culture it carries is the fundamental reason for the change of the kite

culture ecosystem. The folk culture ecosystem constitutes the environment for the survival and development of kite culture. Just as the basic components of the natural ecosystem are producers, consumers, and decomposers, the folk culture ecosystem should also include the art producers, folk artists, art consumers, art disseminators, and cultural exchanges, in addition to the folk life as the supplier of the system's material and energy, and the dynamics of the folk life is closely connected with the society's political, economic and technological levels. Under the impact of industrial civilization and foreign cultures, all components of the folk culture system have changed to varying degrees. Rapid production, copying each other, relying on market demand, no unified industry standards, focusing on production rather than research and development, focusing on immediate benefits rather than long-term plans, focusing on ordering sales rather than exploring the market, a lack of distinctive varieties, a lack of brand awareness. There is no main brand, not a regional cultural product "protagonist", and the advantageous cultural resources can not be "magnificently transformed" into advantageous cultural industries.

Chinese traditional kite is the carrier of Chinese traditional folklore, its content and color reflect the folk aesthetic interest and aesthetic feelings, it is a kind of life culture, that is integrated with life. Modern industrial civilization has changed people's way of life and aesthetic interests. Although praying for good luck is the eternal theme of human life, now the commodity economy provides a rich form of expression for this theme. All kinds of modern art flood people's eyes, and modern artworks rich in contemporary colors replace the traditional folk artworks which are simple, rough, and with a countryside atmosphere. The folk beliefs and customs attached to kites, such as "letting off bad luck" or "inviting good luck", have disappeared, and the channel for kite culture to be passed on from generation to generation through folk beliefs has become narrower and narrower.

At the same time, western kites have challenged the traditional Chinese kites. After being used in scientific exploration, kites in the West have taken the same path as Chinese kites and embarked on the development of recreation and fitness. However, western kites are not combined with art, have no clear theme, or content, and even less faith, but are purely a kind of recreational toy. It is mainly based on geometric shapes, modeled after umbrellas, wings, gliders, and other forms. In recent years, kites as a fitness tool have been popular among Westerners, and have developed rapidly in the West, with the emergence of new types of kites such as stunt kites. Compared with traditional kites, stunt kites need to use more parts of the flyer's body, and need to run and change constantly, which is more useful and interesting for physical exercise, and its challenging, sporty, and skillful nature has become the new favorite of young people in particular. Although stunt kites have high technological content, such as the use of high-quality fabrics, the grasp of the angle of delta wings, the tying position of kite lines, etc., all of which must be suitable for the performance and flying requirements of stunt kites, its production is relatively simple and does not

require much manual work, which is more suitable for the modern large-scale production method. The invasion of western kites as a kind of foreign culture into the Chinese kite autotelic system has broken the situation of the unification of science and artistry, truth, goodness, and beauty of traditional Chinese kites, which is one of the reasons for the decline of traditional kites.

3.3.3 Balancing the Ecosystem of Kite Culture in Yangjiabu, Weifang, Shandong Province

The survival of Yangjiabu kites itself is a complex system of folk art system and belongs to a part of the social system, whether it can survive and develop in the society mainly depends on whether its sub-system can be orderly and healthy operation, and can develop in coordination with the big social system. The mechanism and principle of the survival of Yangjiabu kites are just like the ecosystem in biology, its survival and development are not isolated, it has a close relationship with the social environment in which it survives, and at the same time, the cultural value chain of kites will change at different historical stages, and its function, environment, audience, and administrators will all change. Therefore, in the cognition of its survival or decline, we must jump out of the limitations of folk art itself and put it back into the human ecosystem and the cultural value chain, and "observe" it from a larger and higher angle and vision, so that we can fundamentally and essentially understand and grasp its development, survival mechanism and the changing pattern. The ecosystem of Yangjiabu kites is in the middle of the world.

The ecosystem of Yangjiabu kites is a huge, structurally complex, functionally diversified highly coordinated, and adaptable homeostatic system within a certain space, composed of folk art communities and their environments, and linked by the functional regulation of various cultures (conceptual and ideological information). Yangjiabu kites can survive and develop in this ecological balance system. The social environment is the original foundation for the occurrence and development of Yangjiabu kites, and it is also the most fundamental element for the integrity and stability of the folk art ecological chain. Its special composition contains complex factors, such as geographic location, geographic environment, historical evolution, regional culture, ways of survival, and so on, and then produces a matching folk art ideology, which is the life appeal expressed by people in their daily life and activities in the way of seeking survival, seeking profit, and avoiding harm (Guo, 2023). As a folk art, Yangjiabu kites naturally and necessarily function as "props" to satisfy such demands, assuming the role of a functional carrier of people's life demands in their secular lives. As a functional carrier, the folk art form naturally serves the purpose of its existence and realizes the value and meaning of its existence, and the pure and unique purpose also shapes the definite and patterned folk art existence form. The prevalence of the folk art forms formed by Yangjiabu kites in the social environment

has become part of the social environment, strengthening and stabilizing the reality of the social environment. In this way, a cycle of folk art ecosystem is formed, and this cycle never stops flowing and continues, constituting the stable structure of the Yangjiabu kite folk art ecosystem. However, the factors of the ecosystem are always fluctuating in the change and development of society, and the ecological chain is closely linked to maintaining stability. A stable ecosystem will inevitably build a stable state of survival of folk art, and an unstable ecosystem will inevitably destroy the state of survival of folk art, and even make it decline and die out. Folk art ecological chain is in a state of balance under normal circumstances, but this balance is a dynamic way society is constantly developing, and changing, dynamic, the various elements of the social composition of society are always changing with the changes in society, the various elements, contradictions are always colliding with each other, affecting the direction of the society, but also affects the material environment and cultural environment changes. Folk art in the social environment is also "going with the flow" in the dynamic, but this dynamic has been limited to a certain range. The stability of the social structure and economy makes the folk art ecosystem have a strong "self-control ability, when the influence of the external environment changes on it once it reaches a certain queer value, it will happen to regulate it back to maintain the normal survival and development of the folk art, which is the balance of the folk culture ecosystem. As the crystallization of the collective wisdom of human beings, the creation, appreciation, and use of kites belong to the unique behavior of human beings. The artistic development of kites is not determined only by outstanding artists or personal interests but is mainly influenced by the cultural ecological environment and humanistic context, it is also determined by the objective development law of human productive forces and is influenced by a variety of complex natural and social factors, which are not shifted by individual's subjective will. These factors include the natural, geographical, and climatic environment, as well as the social environment, such as the level of development of productive forces, the order of economic operation, political and legal conditions, social psychological tendencies, cultural customs, and habits. Therefore, the basic ideas, theories, and methods of cultural ecology are the inherent basis for the study of kite culture research. Therefore, if we want to analyze kite culture comprehensively, scientifically, and systematically, we must pay attention to the relationship between kites and the natural environment and the big system of society and culture and also analyze the adaptability of the kite self-system and society. At the same time, we should also pay attention to the study of the historical time and space direction of kite culture, and grasp and study the morphological evolution and historical inheritance of kite art from both horizontal and vertical directions. Since it is called a system, it is bound to have its inherent structure, and there is bound to be connection and mutual interaction among the structures within the system. Generally speaking, the composition of cultural ecosystems has two main aspects: natural ecosystems and artificial ecosystems. It is specifically divided into five levels: natural environment, science

and technology, economic system, social organization, and values. The impact of these five levels on culture is not side by side or uniform, but progressive from the outside to the inside. The closer to the center, the greater the influence on culture, and vice versa.

3.3.3.1 Preservation and continuation of traditional skills and ways of passing them on

The development of the inheritance mode of Weifang Yangjiabu kites has unique characteristics and values. Yangjiabu kites pay attention to retaining traditional elements in the inheritance, while constantly making innovations. By introducing new design concepts and production techniques, its kites have a modern aesthetic while maintaining the traditional flavor. This strategy of balancing tradition and innovation makes Yangjiabu kites highly competitive in domestic and international markets. The Yangjiabu kite inheritance model attaches great importance to the cultivation of talents. By setting up training courses on kite-making techniques, organizing lectures by experts, and dispatching artists to various places to teach their skills, they have cultivated a large number of inheritors of kite-making techniques. In addition, they have cooperated with universities and research institutions to carry out theoretical research on kite-making skills, further promoting its inheritance and development.

Figure 23 Yangjiabu Kite Culture Folk Village

The government plays an important role in the Yangjiabu kite inheritance model. Through the introduction of relevant policies, financial support, and the establishment of specialized institutions, it has provided a strong guarantee for the protection, inheritance, and development of Yangjiabu kites. The inheritance and development of Yangjiabu kites cannot be separated from the extensive participation and cooperation of the community. By establishing cooperative relationships with local schools, community organizations, enterprises, and so on, and jointly organizing kite-making competitions, cultural festivals, and other activities, more people can understand and participate in the production and inheritance of kites. This model not only improves the popularity of kites but also injects new vitality into local economic development. Yangjiabu Kite Culture and Folk Village in Hanting District of Weifang City adopts

the mode of combining kite sales and folk tourism as well as study and research, which not only spreads the Weifang kite culture but also promotes the development of the local economy while allowing the Weifang kite culture to show a prosperous scene of a hundred flowers blossoming and a hundred schools of thought contending for supremacy (Qi, 2022).

The Yangjiabu kite inheritance model emphasizes the perfect combination of technology and art. While preserving the traditional production techniques, it actively introduces modern technological means, such as the use of new materials and the introduction of new techniques, to improve the production level and artistic value of kites. This combination of technology and art makes Yangjiabu kites more practical and collectible while meeting people's aesthetic demands. Yangjiabu kite inheritance mode attaches great importance to the cultivation of talents. By setting up training courses on kite-making techniques, organizing lectures by experts, and dispatching artists to various places to teach their skills, they have cultivated a large number of inheritors of kite-making techniques. In addition, they have cooperated with universities and research institutions to carry out theoretical research on kite-making skills, further promoting its inheritance and development. The strong support and guidance of the government have provided a stable external environment for the development of the Yangjiabu kite inheritance model.

3.3.3.2 Cultural revival of traditional festivals and festivals

In the context of globalization, the exchange and integration of various cultural values is becoming more and more common. People have gained a new awareness of and respect for their traditional culture. Traditional festivals and festivals are an important part of Chinese culture. Weifang Yangjiabu Kite Culture and Traditional Festivals and Festivals Culture are closely related to each other and have profound historical and cultural connotations. Their revival is a re-recognition and respect for these cultural values. Traditional festivals and festivals not only have profound historical and cultural connotations but also have a natural connection with kite folk art culture. The cultural connotations of traditional festivals and festivals are an important foundation for revitalizing and passing on these cultures (Guo, 2023). The connotations and values of kite culture can be better understood through an in-depth study of the historical origins, cultural significance, and ceremonial customs of traditional festivals and festivals. Protecting and handing down these festivals and festivals will help maintain and pass on the uniqueness and diversity of kite culture. By educating and popularizing the culture of traditional festivals and festivals, the public's knowledge and understanding of traditional culture can be enhanced, and cultural confidence and identity can be strengthened. Educational activities on traditional festivals and festivals are carried out in schools, communities, and other places so that more people can understand and participate in the inheritance and development of traditional culture. The development of modern technology provides

new opportunities for the revival of traditional festivals and festival culture. Through technologies such as the Internet, social media, and virtual reality, it is possible to innovate the forms of expression and dissemination of traditional culture to attract the attention and participation of more young people (Wang & Zhao, 2022). For example, the rituals and performances of traditional festivals can be displayed through webcasting and short videos, so that more people can understand and feel the charm of traditional culture. The government plays an important role in the revival and inheritance of traditional festivals and festival culture. The government can introduce relevant policies and plans to support the protection, inheritance, and innovative development of traditional festivals and festivals. At the same time, the government can also guide all sectors of society to participate in the inheritance and development of traditional culture, forming a situation in which the whole society participates together. Of course, while protecting and passing on the culture of traditional festivals and festivals, it is also necessary to innovate and develop these cultures. Combined with the needs and changes of modern society, traditional festivals and festivals are injected with new elements and vitality, to make them closer to the life and cultural needs of modern people. The revitalization of traditional festivals and festivals culture is not only limited to the country but can also go to the international stage. By participating in international cultural exchange activities, the uniqueness and diversity of traditional Chinese culture can be demonstrated, attracting the attention and love of more international friends. This can not only promote the international dissemination of Chinese traditional culture but also open up a broader space for the development of Chinese traditional culture.

In conclusion, the revitalization of traditional festivals and festival culture is a long-term and complex process that requires the common participation and support of the whole society. Through in-depth research and understanding of the cultural connotations of traditional festivals and festivals, innovation and development of these cultures, strengthening of education and popularization efforts, government support and guidance as well as interdisciplinary cooperation and exchanges, and the implementation of other measures, the revival and development of traditional Chinese culture can be promoted, contributing to the building of a strong cultural nation.

3.3.3.3 Relationship between commercial and cultural values

The history of Yangjiabu kites can be traced back to hundreds of years ago, and it carries the kite-making skills and flying dreams of the Chinese nation. Each kite contains craftsmanship and wisdom passed down from generation to generation, and has become an important part of the traditional culture of the Chinese nation. This historical inheritance has given the kites a deep sense of national identity and cultural belonging and has gradually formed commercial value as well as cultural value.

With the development of the market economy, kite-making has gradually changed from a mere handicraft to an industry with commercial value. With the improvement of people's living standards and the growth of their interest in traditional culture, the market demand for Yangjiabu kites has been expanding, and with kites as the leader, an industrial chain including design, production, sales, tourism, and other links has been formed. Kite making has gradually transformed from family handicraft workshops to industrialized development, forming a complete closed loop of sales including raw material supply, production and processing, sales promotion, and other links. Yangjiabu kite inheritance model makes full use of local resources and promotes the integration and linkage of related industries. Yangjiabu kite inheritance model actively expands domestic and international markets, expanding the sales channels and influence of kites by participating in exhibitions, organizing sales activities, and developing online platforms. At the same time, it constantly adjusts its product positioning and marketing strategy to increase its market share, taking into account market demand and consumer preference. These initiatives have provided strong market support for the inheritance and development of Yangjiabu kites. However, in this process, Yangjiabu kites did not lose their cultural core. Instead, it combines traditional culture with modern business practices through innovation and adapting to market demands. To adapt to the diversified demands of the modern market, Yangjiabu kites have been constantly trying to innovate while maintaining their traditional production techniques. Innovative improvements are made from material selection, and modeling design to function expansion, etc. A variety of styles and styles of kite products have been introduced to meet the needs of different consumer groups. With its unique cultural connotation and exquisite production skills, Yangjiabu kites have gradually formed a brand effect with local characteristics. Through brand building and market expansion, Yangjiabu kites not only occupy a place in the domestic market but are also exported overseas, becoming one of the important products of China's cultural export.

Yangjiabu kites are not only an entertainment tool or handicraft, but also a carrier of cultural identity and inheritance for the local community. Through kite making and flying, people not only pass on their skills but also strengthen their cultural values and community cohesion. Kites have become a bridge connecting past and present, tradition and innovation. In addition, in the process of inheriting and developing Yangjiabu kites, emphasis is placed on the harmonious symbiosis with the natural environment. Measures such as choosing environmentally friendly materials, optimizing the production process, and reducing waste emissions have realized the green and sustainable development of kite making. This concept of sustainable development provides a strong guarantee for the long-term development of Yangjiabu kites With the development of tourism, kite culture has gradually become a kind of tourism resource, attracting a large number of tourists to visit and experience. Through the combination with the local tourism industry, kite-making experience

programs and tourism routes are developed to provide tourists with rich cultural experiences and tourism products. This mode of industrial integration and linkage further promotes the inheritance and development of Yangjiabu kites. By developing kite tourism routes, building kite museums, and organizing kite festivals, it can promote the dissemination and popularization of kite culture, and at the same time drive the development of related industries, such as catering, lodging, shopping, and so on. As a kind of artwork with deep cultural connotations, the excavation and dissemination of kites' cultural connotations is the core link of the kite cultural value chain. Through the research on the historical origin, cultural significance, and folklore of kites, the cultural connotation of kites can be deeply excavated, providing theoretical support for the inheritance and development of kite culture. As a kind of traditional handicraft, the inheritance of kite-making skills is an important link in the value chain of kite culture. From material selection, design, and production to painting and decoration, each step requires exquisite skills and experience. The inheritors pass down the kite-making skills to the next generation through oral and heart-to-heart teaching, ensuring the continuation of the kite culture. In addition, the Yangjiabu kite inheritance model pays great attention to brand building and promotion. In addition, it actively carries out international exchanges and cooperation to promote Yangjiabu kites to the world stage. By registering trademarks, participating in international exhibitions and competitions, and organizing kite culture festivals, the popularity and reputation of Yangjiabu kites have increased. Participating in international cultural exchange activities demonstrates the uniqueness and diversity of Chinese kite culture and attracts more attention and love from international friends. This can not only promote the international dissemination of Chinese kite culture but also open up a broader development space for kite culture (Ji & Shi, 2018).

However, this balance is not an easy one, and while pursuing commercial value one must be vigilant not to over-commercialize to the detriment of the cultural value of kites. To this end, a series of measures need to be taken, such as strengthening training and support for craftsmen, promoting kite culture and educational activities, and setting and enforcing strict quality standards. The Yangjiabu kite heritage model emphasizes feedback and improvement in the development process. By collecting opinions and suggestions from consumers, experts and scholars, community members, etc., problems and shortcomings are discovered promptly, and effective measures are taken to improve and perfect them. This concept of continuous improvement makes the Yangjiabu kite inheritance model able to continuously improve and develop while meeting the market demand and promoting the dissemination of culture and communication to promote the development of tourism and contribute to the prosperity of the local economy. The development of the Yangjiabu kite inheritance model in Weifang, Shandong Province is a multi-faceted and multi-level systematic project. It successfully combines traditional elements with modern elements, cultural heritage with innovation, education with training, brand building with promotion, and

so on. Through this comprehensive development strategy, Yangjiabu kites have not only enjoyed a great reputation at home but also established a good image internationally. This successful inheritance model is an important reference for the protection and inheritance of other traditional cultures. Yangjiabu kites in Weifang, Shandong Province embody both significant commercial value and profound cultural value, and the formation of this balance is the result of the interweaving of multiple factors of history, skill, market, and culture. The formation and construction of the value chain of traditional kite culture requires cooperation and communication in many aspects, from skill inheritance to cultural innovation, from industrial development to international exchange and cooperation, each link is indispensable. Only through the joint efforts and support of the whole society can the inheritance and development of kite culture be promoted and its greater value and influence be realized.

Conclude

This chapter mainly carries out the research and analysis of the geographic environment, cultural ecology, and related social life of the kites produced and developed in Yangjiabu, Weifang, Shandong Province. Chinese traditional kites are the carrier of Chinese traditional folklore, and their contents and colors reflect folk aesthetic interests and aesthetic feelings; it is a kind of living culture, which is integrated with life. However, modern industrial civilization has not only changed people's way of life but also changed their aesthetic sentiment. Therefore, the increase in productivity, the change in production mode, and the impact of industrial civilization and the foreign culture it carries are the fundamental reasons for the change in the kite culture ecological environment. Meanwhile, because kite artists and kite makers from all walks of life have different life experiences, different cultural levels, and different knowledge structures, different systems and genres have been formed. Each type of artwork is never isolated in the process of occurrence, and it has a close connection with its neighboring natural environment and social communities. Therefore, kites are an important cultural carrier in studying the lifestyle, economic development level, and national beliefs of ancient human society, which can restore the information of human history at that time more clearly. The development of kites has also gone through a general spiral linear development process, and in modern times, kites have transcended some of their original stage of practical value attributes and become unique folk culture artworks. The development of folk art cannot be separated from the cultural soil that nurtures it, and our current approach to folk art often focuses on the physical artwork itself, lacking the exploration of a deeper cultural spirit, which to some extent deviates from the normal development of folk culture. Therefore, as a long history of human crafts, the historical development of kites has always been inseparable from the specific background of the times and

humanistic features, which influence, constrain, and promote each other, and the natural ecological environment and humanistic background are the important basis for the survival and development of folk art. The natural ecological environment and humanistic background are the important basis for the survival and development of folk art and also provide rich resources and materials for practical design. In the following chapters, the artistic value of Yangjiabu kites in Weifang, Shandong Province and the formation and management of the cultural value chain will be discussed and researched.

พหูนํ ปณฺฑิโต ชีเว

CHAPTER IV

Managing the Cultural Value Chain: Traditional Folk Art in Cultural Ecology and Innovation

Introduction

The content of this chapter mainly introduces the development process and operation management of the cultural value chain of the traditional folk art of kites in Yangjiabu, Weifang, Shandong Province, and explores how the kites in Yangjiabu, Weifang, have been gradually transformed from the witchcraft and entertainment act of "flying bad luck" in the early days to the commercialized international activity, and how it interacts with the local way of life and production in the process, and how managers change their strategies at each stage to complete the transformation from folk art to international kite festival. During this period, how did it interact with the local way of life and production, how did the managers change their strategies at each stage, and how did it gradually complete the transformation of the cultural value chain from folk art to the international kite festival, which greatly promoted the innovative development of the Weifang Yangjiabu Kites as well as the opening-up of the local area and the development of the local economy, and used this as the basis of the research to look for the paths and methods of cultural innovation, and to provide the next step of the Weifang Yangjiabu Kites based on the application of design to design ideas and necessary design materials. and the necessary design materials. This chapter, I divided into three subsections for research and discussion. The first subsection introduces the generation and development management of the cultural value chain of Shandong Weifang Yangjiabu Kites; the second subsection introduces the opportunities and challenges of Shandong Weifang Yangjiabu Kites in the cultural value chain; and the third subsection introduces the development and cultural innovation ideas of Shandong Weifang Yangjiabu Kites in the cultural value chain.

พหูนํ ปณฺฑิโต ชีเว

4.1 Managing Cultural Value Chain Development in Cultural Ecological Balance

4.1.1 From the Folk Custom of "Letting Go of Bad Luck" to Commercialization

Weifang Yangjiabu kites have been closely connected with folk life, folk beliefs, folk aesthetics and consciousness, and moral emotions since they entered the folk world, and they have the function of avoiding evils and good fortune and spiritual education. In Weifang Yangjiabu kites, there are a lot of kites modeled on myths and legends or historical stories linked with ancestral spirit beliefs, which are all closely related to beliefs and customs. Kite flying is not only a kind of amusement activity, but also a kind of witchcraft behavior in ancient times, the separation of man and god, and people's wishes to reach heaven, then the only way is to disappear these pictures and symbols on the earth, to do so, it is nothing more than to burn them with fire, let the water wash them away, or let them fly in the sky, so people think that kite flying can let go of their dirty gas. Weifang kite artists said that the old Weifang County called kite flying in spring "Flying Yu" and "Flying Hi", which is a figure of "good luck". In the early days of Weifang Yangjiabu kite flying, the main purpose was to carry out the witchcraft of "letting go of bad luck" as well as the entertainment behavior, which was the primary stage of the development of the cultural value chain of Weifang Yangjiabu kite flying. There is still this custom in the local folklore, on the day of the Qingming Festival, some people fly the kite high and far, and then intentionally cut the kite line, letting the kite drift away with the wind, which means to release the "bad luck" accumulated in a year, so that they will not be sick in a year, and have good luck, eliminating disasters and taking refuge. However, if the kite accidentally falls into someone's house, that person's house is considered to have been exposed to bad luck and will face disaster. If the kite accidentally falls on other people's houses, the owner of the kite has to quickly bring joss sticks and candles, paper horses, fish, meat, and old wine to the owner of the house to make amends and apologize, not only have to burn joss sticks and kowtow to the head but also have to sacrifice over the family hall bodhisattva[67] to take away the kite or else the owner of the house will have to rip the kite to shreds and burn it down. After the kite was invented as a flying object, its practical effect of being able to fly up to the sky was in line with the need for the long-existing witchcraft concept of communication between man and god, so the kite was combined with the witchcraft, and superstitious ideas, and it became a tool for people to express their wishes to the sky and confide their emotions, revealing the folk belief concepts.

Kites gradually developed into commodities through a long development. After a long development, in the Song Dynasty, kite making became an independent

[67] The house god usually refers to the statue of the bodhisattva enshrined in the home to symbolize the fulfillment of merit and compassion. According to folk beliefs, the gods of the house include Goddess of Mercy, Goddess of Guan Shing, Goddess of Fortune, etc. Among them, Goddess of Mercy is known for her compassion and her ability to save the world from all kinds of sufferings, so she is widely worshipped in the Buddha Hall of the house in the hope of bringing happiness and good fortune.

profession, and in the Qing Dynasty, Weifang kites became an important livelihood for residents, at this time, the transformation from folk custom to commercialization had been completed. At this time, Weifang kites had developed greatly, and kite-making had developed into a specialized occupation. During the Qianjia period of the Qing Dynasty, Weifang kites entered the heyday. Weifang kites in the Qing Dynasty became famous at home and abroad for their rich local color and folk atmosphere, and became an important livelihood for the folk residents to make a living, foreign merchants came here in an endless stream, and the business was very prosperous. Among them, Yangjiabu kites are the most famous. "At the end of the Qing Dynasty and the beginning of the Republic of China, there were more than 60 households and 200 people engaged in kite making in Yangjiabu Village alone, and 180,000 kites were rolled annually", which showed the prosperous situation at that time. During this period, Weifang kites were also spread to the United States, Japan, and other places.

4.1.2 From a Family Workshop to the Creation of a Kite Factory

The self-sufficient small peasant economy provided an ecological environment for the development of folk art. In the era of large family workshops, many kite artists learned kite-tying techniques from their fathers' ears and eyes. The family workshop is the main production mode during the development of traditional handicrafts, and it is also an important manifestation of rural economic development. According to the records, since the nineteenth century, Weifang (previously called Weifang County) has had a lot of traditional handicrafts production, there were "two hundred red furnaces, three thousand coppersmiths, nine thousand embroidery women, one hundred thousand looms," said Weifang traditional handicrafts, Weifang traditional handicrafts production, most of the traditional handicrafts production in Weifang to the main production of the family workshop, while there are a small number of large-scale production factories (footwear), the production of kites is the main mode of production. There are a few large-scale production factories (Foot: Zhang Jizhen. Protection, Inheritance, and Development of Folk Sports in Cultural Perspective. (Shanghai Institute of Physical Education, 2008.). In Liu Yuzhao's book, "Organizational Changes of Rural Industrialization - From Family Workshops to Company Management", it is pointed out that in family workshop production collaboration, producers make full use of the social relationship between families and households, which makes the cost of family workshop production lower, and therefore this gives producers a strong competitive advantage when they enter the market. (Footnote: Liu Yuzao. Organizational Changes of Rural Industrialization - From Family Workshops to Company Management. (Shanghai: Gezhi Publishing House, 2009) As early as in the late 1930s, Zhang Zhiyi investigated and researched the handicraft industry of Yicun village in Yunnan Province, through which he developed the handicraft development of Yicun village mainly consisted of the cottage industry, which was mainly based on the weaving of gabion, and the workshop industry, which

was represented by the production of earthen paper. (Footnotes: Zhao Ergong, Rao Hui Zhang. Multi-species, small batch flow operation production organization and management. (Beijing: China Railway Press, 1981.)It is understood that the traditional handicraft industry in Wangcun was also dominated by the form of home workshop production. In Wangcun, production employees were mainly members of their own families and part-timers, and production, processing, storage, and sales were all carried out in their residences (Park, 2008; Tang, 2008; William, 2009).

Figure 24 Villager Mr. Wang Xingsheng rolling a kite skeleton.

According to the historical records and the memories of the old people in Yangjiabu, family inheritance was the main form of kite inheritance in Yangjiabu in the early days, and almost all the families in Yangjiabu of the older generation were familiar with the technology and process of kites, but there was also a strict rule within the family inheritance, that is, "Passing on to the male, not to the female". Therefore, every year after the Spring Festival, the big families would start to make kites, and the families would make bamboo, tie up the skeleton, paint the kite surface, and glue the kite, so the making of kites was completely carried out within the family. This kind of collective family livelihood determines the possibility and inevitability of family inheritance, and most of the older people in Yangjiabu learned how to make kites at that time. The kite inheritance within the family has a relatively big characteristic, that is, the cultural capital of inheritance is greater than the technical capital, and the cultural capital such as external reputation and honor is more

attractive to the outside world than the actual technical ability. The industry, technology, experience status, and honor of the fathers could be passed on to the next generation within the family, and each successor of the kite technology enjoyed the capital left by the fathers, which provided a relatively stable mode of technical and cultural inheritance for the Weifang Yangjiabu kites. The management of the kite culture value chain in this period was mainly carried out within the family, with family members being the main managers. After the gradual disintegration of the extended family, the great impact brought by the capitalist economic system caused changes in the production mode of kites, which became more and more detached from the family and began to be mainly produced in factories.

Figure 25 Factory employees cut fabrics, pack them for shipment, and warehouse

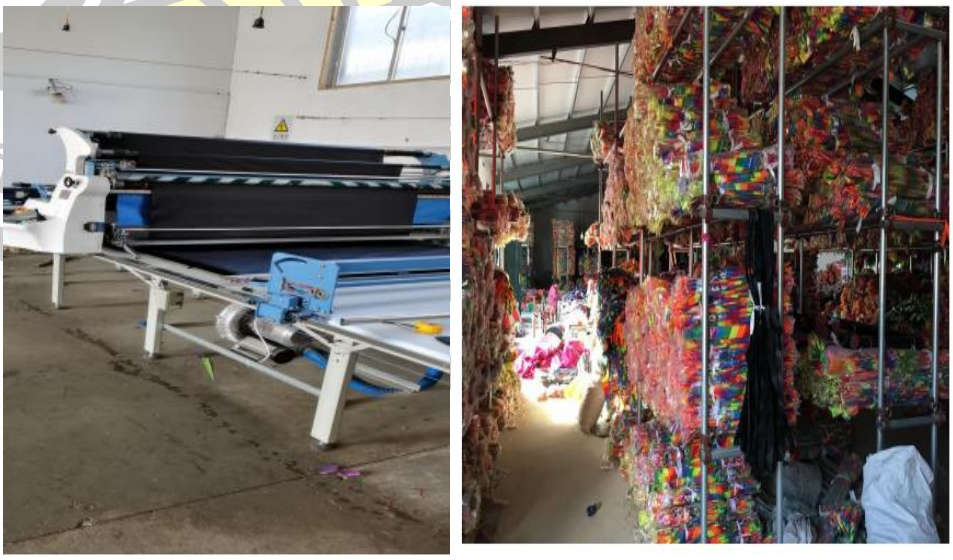

Figure 26 Fully automatic fabric pulling machine and kite factory warehouse

Figure 27 Kites and kite-supporting products

In 1986, a kite factory was built in West Yangjiabu. In terms of inheritance methods, the establishment of the kite factory marked the replacement of the family inheritance of the past by the master-apprentice relationship within the factory, and kite technology was no longer monopolized by a family inheritance relationship, and more young people from the neighboring villages came to the factory to learn how to tie kites. Although mass production has allowed Yang Jiabi to start moving towards a larger market and stage. However, there are drawbacks. The production of traditional handmade kites is time-consuming, laborious, and costly, and to reduce costs and obtain better economic benefits, many kite producers have gradually adopted semi-mechanical and semi-manual production methods to simplify the production process, such as changing the handmade bamboo to a mechanical bamboo, and hand-painted kites to machine-printed kites, etc. In addition, there are also the problems of cutting corners and passing off the best for the best, which results in rough kites and poor quality. A skilled kite artist can make two to three kites a day at most, which is far from catching up with the mechanized operation, so it is difficult for purely handmade kites to survive. In addition, in the early days of family inheritance, family members had the opportunity to learn the whole technique, while the factory assembly line production method has led to fewer and fewer people being able to master the whole technical process. The factory assembly line production method leads to the loss of traditional handicrafts. Among the four major kite-producing areas, Weifang kites have the earliest development of marketization and the highest degree of commercialization, but the quality of kites has declined seriously in the vicious circle

of low-price competition in the past few years, which has seriously affected the reputation of Weifang kites.

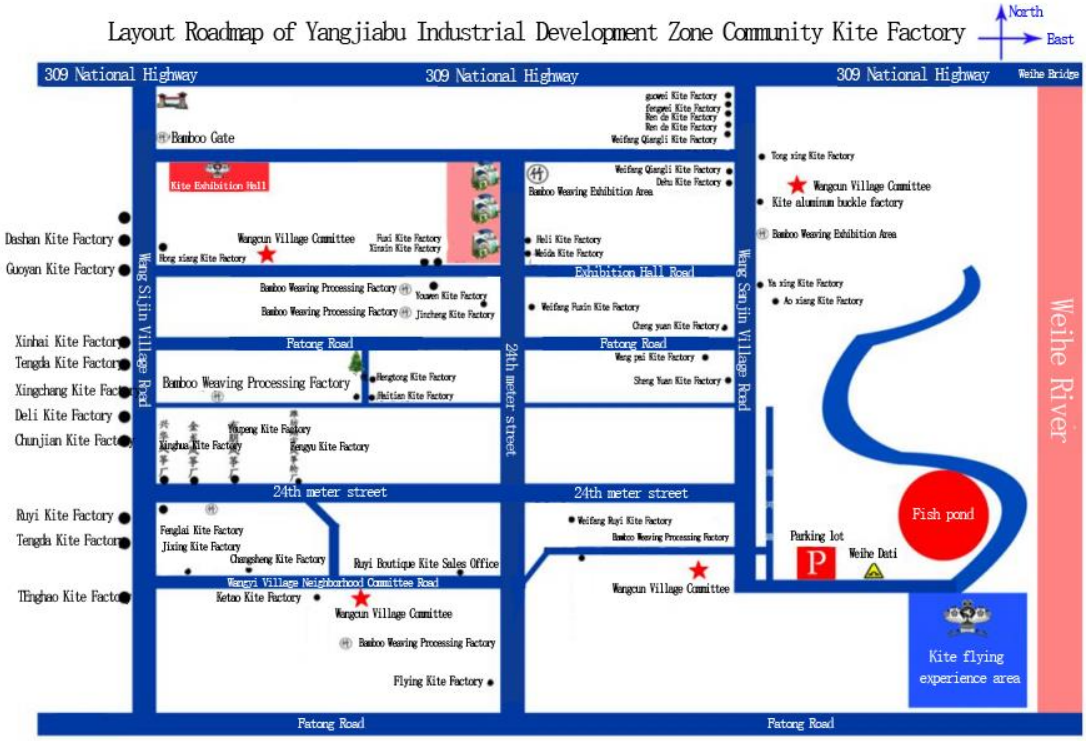

Figure 28 Layout of kite factory in Wangjiazhuangzi community

Manufacturer's name	Brand name	Product
Deli Kite Factory	Deli brand	Modern kites
Hongyuan Kite Factory	Wang brand	Kite accessories, kites
Jianhua Kite Factory	Jianhua brand	Kite related products
Changsheng Kite Factory	Changsheng brand	Various soft kites
Xinghua Kite Factory	Huaxing brand	Various ornamental kites
Strong Wire Industry	Qiangli brand	Kite related products
Xingsheng Kite Factory	Xingye brand	Kite related products
Guoyan Kite Factory	Guoyan brand	Modern kites
Chunran Kite Accessories Factory	Chunran brand	Kite related products

Table 6 List of some kite manufacturers, brands, and products in Wangcun

4.1.3 From Folk Art to International Kite Festival

In the spring of 1933, the county government of Weixian County of the then Republic of China decided to hold a kite competition every two years from then on, and the first Weixian Kite Competition was opened in the lobby of the county government office.[68] At this time, the center of gravity of the kite's cultural value chain management gradually began to shift from within the family to the village as well as the county government. The second Weixian Kite Tournament was held in the playground of Nanguan of the county city during the Ching Ming Festival in 1935, and more than 60 kites were screened to participate in the tournament, which was watched by tens of thousands of people outside of the field. The third Weixian Kite Tournament was held on the beach of the Bailang River in the center of the county city during the Ching Ming Festival in 1937. More than 90 kites participated in the competition with more than 60 varieties. After 1937, Japan invaded and Weixian County fell in 1938, and the kite competition in Weixian County was suspended. Until 1949 when the People's Republic of China was founded, Weifang kites as the symbol of Weifang city got the chance to develop. 1958 in the spring Canton Fair, 200 Weifang eagle kites were snapped up by foreign businessmen. From then on, "Weifang kites" began to take the international stage (Huang, 2020; South & Daley, 2010). However, after the founding of New China, the economic development was unstable, and there were ups and downs during the period, it was only after the reform and opening up in 1978 that the Weifang kites were revitalized. From 1984, the municipal government gradually replaced the county government to carry out kite-related festivals and cultural activities, and Weifang City successfully organized the International Kite Festival in succession; in 1988, Weifang City was selected by the kite industry at home and abroad as the "Kite Capital of the World"; in April 1989, approved by the State Council, the "International Wind Federation (IWF) " was established to promote the development of kites in Weifang City. International Wind Federation"[69] was established in Weifang, and Weifang kites went to the world. 2004 Weifang International Kite Festival was listed as UNESCO Folk Art Organization Cultural Heritage and Folk Protection Project; the state attaches great importance to the protection of intangible cultural heritages, and on May 20, 2006, Weifang kite making skills were listed in the first batch of national intangible cultural heritages with the approval of the State Council. State-level intangible cultural heritage. By

[68] The main hall, also called the public hall and the main hall, is the place where the magistrate holds important ceremonies, hears important cases and welcomes superior officials, and it is the main building in the whole magistrate's office.

[69] The International Kiteboarding Federation (IKF), abbreviated as "IKF", is an international association registered with the Ministry of Civil Affairs and established on April 1, 1989 in Weifang, China. There are 16 member countries and 67 member states, and the seat of the secretariat is Weifang City, Shandong Province.

now, the managers of the value chain of kite culture in Yangjiabu, Weifang, as well as the way of management have changed and altered again.

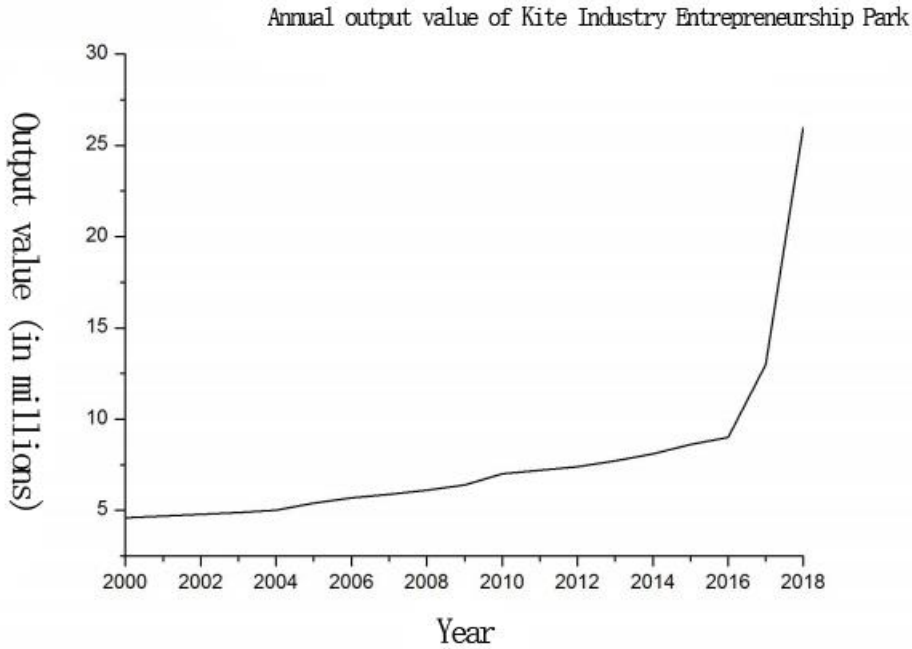

Table 7 Schematic diagram of the production value of the kite industry in Wangcun

Today, the exchange and integration of Weifang Yangjiabu Kites with foreign cultures become more and more frequent, gradually completing the transformation of the cultural value chain from folk art to international kite festival, which greatly promotes the innovation and development of Weifang Yangjiabu Kites, as well as the opening-up and economic development of the local area. Weifang Kite Festival shows China's ancient cultural heritage and wisdom. The Weifang Kite Festival has a long history and has been passed down to the present day, becoming a part of Chinese folk culture and reflecting the Chinese people's yearning and pursuit of peace and a better life. The Weifang Kite Festival not only enriches people's cultural life but also helps to promote the cultural inheritance of Weifang City and the whole country. Firstly, the Weifang Kite Festival can attract a large number of tourists to visit and experience, and it can expand the influence of Weifang City in the whole country and even the whole world and promote the development of tourism. Secondly, the Weifang Kite Festival also helps to protect and inherit traditional Chinese culture. As one of the representatives of Chinese traditional culture, the Weifang Kite Festival can make more people understand and know Chinese traditional culture, enhance cultural self-confidence and national pride, and also help to protect and inherit Chinese traditional culture. In addition, the Weifang Kite Festival has had a positive impact on the

development of local and national cultural industries. Through the promotion and organization of the Weifang Kite Festival, it can promote the development of the cultural industry in Weifang and the whole country, and promote the integration of the cultural industry and tourism. At the same time, the kite festival can also provide a platform for the local handicraft industry to publicize and display, and increase the sales and popularity of local handicraft products.

At the same time, the local government departments have formulated the policy of "kites lead the way, culture sets the stage, economy sings the opera", which has led to the common development of other folk arts around the area, such as woodblock prints, face molding, paper-cutting and so on, and has been widely borrowed by all parts of the country. The organization of the International Kite Festival has enabled the world to understand Weifang and made Weifang go to the world faster, greatly promoting the development of Weifang's economy and tourism. To explore the market economy under the conditions of playing a good festival card, singing a good festival play a new way, from the 16th start, try to market the operation of the meeting mode, so that the kite will do better and better, attract many tourists, the kite will also be held during the Lu-Taiwan Trade Fair, Shouguang Vegetable Expo, the Weifang Industrial Products Exhibition and Sales, Changle Jewelry Exhibition and Sales Ordering Fair, Linqu Stone Exhibition and Sales, Weifang kite design and innovation competition economic and trade activities. and other economic and trade activities. According to incomplete statistics, during the Kite Festival, businessmen who came to Weifang for sports competitions, cultural performances, economic and trade negotiations, sightseeing tours, foreign exchanges, theoretical seminars, and news reports, reached more than 100,000 times. During the kite festival, people can enjoy the beautiful kites, taste the authentic Lu cuisine, and feel the rich local culture. The cultural brand of the Kite Festival also provides an important platform for Weifang's tourism industry. Every year during the kite festival, Weifang's hotels, restaurants, public transportation, and other businesses benefit from the festival, and the economic benefits are becoming more and more prominent.

พหูนํ ปณฺฑิโต ชีเว

Year	Number of Kite Festival Reports (Unit: Articles)
2012	34
2013	42
2014	40
2015	43
2016	86
2017	57
2018	63

Table 8 Number of reports on the kite festival by Weifang Daily in the two weeks before and after the opening ceremony of the festival each year from 2012 to 2018

The specific geographical environment, natural factors, and historical and humanistic factors of "Weifang Kites"; the material and folk culture and art connotation of "Weifang Kites"; the reputation of "Weifang Kites" at home and abroad. The reputation of "Weifang Kites" at home and abroad contributed to the birth of the "Weifang International Kite Festival" and the long-term development of this "international brand activity". This has made Weifang famous all over the world and promoted the overall development of Weifang City. This also confirms the cultural and artistic value of "intangible cultural heritage" in contemporary times and its great role in promoting social development.

Figure 29 Current Development of Kite Folk Art in Yangjiabu Village, Weifang

After the founding of the People's Republic of China, the development of Weifang kites gradually stepped on the right track and was effectively inherited and protected. After the reform and opening up, with the development of the market economy and the Weifang International Kite Festival, Weifang kites ushered in the most prosperous period in its history. On April 1, 1984, the Shandong Provincial Tourism Bureau and Weifang Municipal People's Government jointly held the first Weifang International Kite Festival in Weifang Stadium. Since then, it has been held every spring, attracting a large number of Chinese and foreign kite experts and enthusiasts as well as tourists to come to watch, compete and visit. Weifang lost no time in applying for the title of "Kite Capital", established Kite Square, Kite Museum, AAAA level scenic spot[70] Yangjiabu Folk Art Grand View Garden, and the state also issued kite stamps, which made the kite become Weifang's city card. It not only publicizes and drives the development of kite manufacturing, sales, and other related industries, but also inspires people to participate in kite sports.

The activities of the Weifang International Kite Festival include: holding the opening ceremony, flying ceremony, international kite competition, domestic kite Grand Prix, selecting the ten best kites, visiting the Weifang Kite Museum, visiting the Folk Tourism Village, visiting the cultural neighborhood of Shikwuyuan, visiting the Weifang Gongmei Historical Kite Exhibition Hall and so on.

During the evolution of the Weifang Kite Festival, colorful forms of activities were gradually formed. For example, kite exhibitions, kite-making competitions, kite racing competitions, kite skill performances, and so on, attract a large number of tourists and participants. Nowadays, the Weifang Kite Festival has become one of the important cultural festivals in China, which is attended by tourists from all over the country every year.

The historical background and development of the Weifang Kite Festival locally and nationally are also very important. As one of the birthplaces of Chinese kites, the Weifang kite culture has been well inherited and developed in the Weifang area.

[70] Refers to one of the scenic area levels based on the People's Republic of China Tourist Attractions Quality Level Standards.

Weifang Kite Festival is not only an important part of Chinese traditional culture, but also one of the cultural brands of Weifang, which promotes the development of the local tourism industry and makes important contributions to the development of the local economy and society.

4.1.4 Formation of the Kite Industry Chain and Cultural Value Chain

The International Kite Festival was held in 1984 and has since become a window for Weifang to open up to the outside world. the Weifang International Kite Festival has become an important international comprehensive festival in China since the reform and opening up of China, which has greatly promoted the opening up of Weifang to the outside world and the economic development of Weifang. in 1984, at the time of the first Weifang International Kite Festival, there were about 20 kite enterprises in Weifang, with annual sales of more than 200,000 RMB. As of April 2022, there are 614 enterprises engaged in kite production and sales within the territory of Weifang, among which the number of kite enterprises with independent export rights is about 30. There are more than 1,000 kinds of kite styles and specifications designed and produced, employing about 80,000 people, and the annual sales of kites and extended products are about 2.2 billion yuan, and Beijing, Guangzhou, Yiwu and other places in China are the main marketing and distribution center of Weifang kites, and they are sold to Europe, the United States, Southeast Asia and other more than 40 countries and regions in foreign countries. The kite industry is mainly concentrated in Weifang City, in which Yangjiabu Village in Hanting District[71] has become the main agglomeration of Weifang kite industry production. Leading enterprises of the kite industry in Weifang have opened international and domestic sales channels by introducing advanced technology, developing new products, applying for independent export rights, and representing Weifang to participate in international kite display and performance competitions. The kite event has brought about the development of the kite industry. It makes Weifang kites develop from scattered small workshops to group industrialization. Yangjiabu has developed from a single kite production and processing to a whole industry chain model integrating all kinds of kite parts processing, sales, and distribution, driving more than 50% of the villagers in the village to engage in kite tying or kite-related industries, easing the employment pressure and improving the income, and the Weifang kite industry has grown from a small to a big one, becoming a characteristic industry of Weifang, and gradually forming a kite industry chain, a good economic cycle chain and cultural value chain.

The combination of kite folk culture and economic and commercial behavior generates new economic growth points. The cultural industry of Weifang kites

[71] Hanting District, belonging to Weifang City, Shandong Province, is located in the east of central Shandong Province, bordering on the Bohai Sea Laizhou Bay in the north, Fangzi District and Weicheng District in the south, Changyi City in the east, and Shouguang City in the west. In 1983, Weifang County was abolished and Hanting District was established under Weifang City.

originates from the traditional kite commercial activities in Weifang. Weifang government departments take advantage of its own deep traditional culture and rich folk culture to take the strategic road of "cultural economy" and actively guide the development of the functions and potentials of the folk culture, the local government departments have formulated the policy of "kites pulling the strings, culture setting up the stage, and economic singing". The local government departments have formulated the policy of "kites lead the line, culture takes the stage, economy sing the show", which has opened up a thousand-mile folklore tourism line with strong local cultural characteristics, and the Weifang Kite Festival has become one of the most large-scale and influential cultural brands in Shandong Province. The International Kite Festival has spawned and driven the Lutai Conference, China-Japan-Korea Industrial Expo, Shouguang Vegetable Expo, Changle International Gemstone Festival, and other festivals, which has set up a cooperation platform for Weifang to carry out economic and cultural exchanges, and played an important role in enhancing the popularity of Weifang, promoting the fusion of cultural exchanges, and promoting cultural innovation. At the same time, Gaomi's paper-cutting, cloth toys, porcelain, clay figures, face molding, Yangjiabu's woodblock New Year's paintings, and other folk crafts such as wood carving, silver inlay are all developed and form industrial and cultural chains under the role of kite matchmaking.

4.2 Exploring Yangjiabu Kites in Weifang's Cultural Value Chain: Opportunities and Challenges

4.2.1 Changes in Materials, Heritage Groups, and Functions

Through research and analysis, it is found that the natural ecology, cultural environment, audience, function, and material of Yangjiabu kites are in constant change. According to the data of the Weifang Kite Museum, in the second year of Hongwu, Yang's family ancestor, Yang Boda, moved to Weifang from Sichuan at the beginning of a life of embarrassment, hard to set up a business, to make a living, they went to the fields to collect Panicum rice and Chinese grass[72] as a skeleton to make kites, and did the business of kites. At this time, the kites were mainly made of Panicum rice and Chinese grass, and then bamboo became the preferred material for kite making because of its lightweight and soft initial characteristics. At that time, almost every family had a bamboo garden. Later, with the development of transportation and the further expansion of the scale of kites, bamboo was supplied from the south, mainly from Guizhou and Sichuan. Since then, bamboo has become a necessary material for kite skeleton production. With the development and innovation of technology and the increase of foreign exchange opportunities, new materials such as glass fiber and carbon fiber compounds used in foreign countries slowly appeared in the production of kite frames (Cui, 2020). From broomcorn millet and Chinese

[72] It is a common local straw in Weifang's past.

grass to traditional and authentic bamboo, to the new and innovative materials used in the modern world, the materials used to make kite frames have gone through three stages of development, and each stage of development has had a different impact on kite culture.

In the beginning, the material kite surface was mainly made of paper with a thin texture, long and even fibers, resistant to humidity and impact, and sometimes even the paper head and remnants of the printed and engraved New Year's Paintings were used to tie it. Nowadays, the market of paper kites in Yangjiabu has become less and less, because of the reason of cost and profit, nowadays, it is common to use silk to make kites. Silk is thin, white, and cheap, which is good for coloring, painting, and gluing on the surface of the kites, and the cost of silk kites is one-fifth of the cost of paper kites. The use of silk also opened the way for the later printing of kite surfaces, and the printing industry began to intervene in the production of kite surfaces, greatly improving the scale and efficiency of production. However, the mass production of machines led to the uniformity and lack of individuality of the kites, in addition to the fact that the New Year paintings were always made of paper, so the connection between the Yangjiabu kites and the New Year paintings became more and more distant. With the development of the economy and the improvement of living standards, the rhythm of life and the rich variety of life and leisure ways have led to kite flying slowly fading out of people's vision (Wu, 2019). In recent years, the age distribution of kite inheritors as well as production workers in Yangjiabu, Weifang has shown a younger trend. Although young inheritors are energetic and have a strong memory, and also usually have modern knowledge and skills, at the same time young inheritors lack experience and skills, some traditional techniques and knowledge need a long time of study and practice to master, young inheritors may lack the accumulation and practice in this area, which will cause a break in the skills as well as the loss of the traditional cultural memory of the folklore, and it is difficult to take on the inheritance of the non-heritage skills and the responsibility of protection. It is difficult to take up the important responsibility of passing on and protecting the non-heritage skills.

In addition, kites arose in the period of war, so initially, they existed as a tool for information transmission and transportation of materials (people), and Mozi's student Gongboban (also known as Lu Ban) used a kite as a tool for exploration and inspection of the enemy's situation. With the gradual stabilization of China's feudal society, the military function of the kite gradually faded away, and it began to take on the functions of "letting off bad luck" that modern kites carry. However, in the modern period of China, the social function of kites and the folk culture connotation of kites were at risk of being lost due to the dilution of some folk culture traditions.

4.2.2 Impact of Modern Production Techniques on Traditional Handicrafts

Advances in modern manufacturing have made it possible for many traditional handcrafted processes to be mass-produced using machinery and automated equipment. While modern manufacturing advances have increased production efficiency and reduced production costs, mechanization has led to a decline in the viability of traditional handcrafted products and a neglect of the local ecological environment and cultural context. Although it improves production efficiency and reduces production costs, mechanization leads to a decline in the viability of traditional handmade products, and traditional handmade skills may be eliminated because of their inability to adapt to new production methods and market demand. Taking Yangjiabu kites in Weifang as an example, usually a handmade kite requires twenty to thirty procedures, and a skilled craftsman can only make three to four kites a day at most, while the efficiency of applying modern production technology is dozens or even hundreds of times more than that of purely handmade ones, and modernization is causing people's interest in such complicated traditional techniques and crafts to diminish, resulting in the inheritance of the kite technique facing a great test (Lu & Wang, 2019). Nowadays, fewer and fewer Weifang kite old artists and experts are alive and well, and there are not many young inheritors who can carry on, and more young people tend to choose high-tech careers rather than learning traditional handcraft skills in modern society. The phenomenon of "old craftsmen can't work and young people don't want to learn" is obvious, and the problems of talent gap and lack of talent are more prominent. It is difficult to pass on the traditional kite-making craft effectively, and the emotional value and sense of local identity behind the traditional kites are weakening, which leads to difficulties in the inheritance of traditional handicrafts, and the inheritance of the traditional kite-making craft as well as the development and innovation of folk arts and culture are encountering bottlenecks. This has led to difficulties in the inheritance of traditional handicrafts, and bottlenecks in the inheritance of traditional kite-making skills as well as the development and innovation of folk arts and culture.

4.2.3 Collision of Local and Foreign Cultures

The management of kites has also developed from within the family to the village and county government, to the municipal government and the state, and now it has become an important international festival, precisely because kites are in a constant state of change and therefore face different opportunities and challenges. At the same time, due to the changes in functions, purposes, audiences, managers, and market demands, kites need to maintain traditional cultural symbols and craftsmanship skills, and at the same time need to obtain more opportunities for cultural exchange, innovation and diversification brought about by the collision of local and foreign cultures. The collision of local and foreign cultures can bring

opportunities for cultural exchange. When two cultures meet, they learn from each other and each other. Local culture can absorb the excellent elements of foreign culture and enrich its cultural connotation. Similarly, foreign cultures can learn from the essence of local cultures and incorporate them into their own. Such cultural exchanges can promote mutual understanding and respect among different cultures and enhance friendship and cooperation among them.

Figure 30 Roadmap of Chinese kites around the world

Weifang kites, as part of traditional Chinese culture, have been influenced by foreign cultures in their production techniques and aesthetic styles. For example, the materials used in the production process and some of the production techniques. Some modern Weifang kites use new materials such as carbon fiber and fiberglass instead of traditional bamboo to increase their strength and durability. In addition, Weifang kites have been influenced by some foreign cultures in their themes and designs, forming a new style with a sense of the times and an exotic flavor. However, in the actual process, there are still many problems, for example, kite-making is a skill that requires specialized study and practice to master. Nowadays, some of the kite-making skills are facing the risk of being lost, the popularization and in-depth research of kite-making skills are not developed enough, and the cultural identity is generally reduced, coupled with the fact that different cultural backgrounds and traditions have different values, beliefs, and customs, leading to poor cultural exchanges resulting in the difficulty of integrating local and foreign cultures, and the lack of in-depth exchanges and integration. In addition, there are differences between traditional kite culture and modern science and technology, art, and other fields, the lack of a common language, makes it difficult for kite culture to integrate with modern culture, resulting in an

aesthetic generation gap, and many cultural products and services are unable to meet the market demand, limiting the dissemination and influence of culture. The inability of folk native art and culture to integrate and develop with a foreign culture and modern culture is not conducive to the promotion of folk native art and culture innovation and diversity (Wu, 2019).

January 1982	The French China Friendship Association held a Chinese Kite Exhibition in Paris and performed a flying performance at the Leicester Beach.
Spring 1983	Weifang kites were invited to Shanghai to participate in a Chinese and foreign kite flying performance.
March 1983	Three kites from Weifang, including the "Dragon Head Centipede" and "Phoenix".
July August 1983	The President of the Seattle Kite Association in the United States, David Qian, invited the Weifang Kite Association of China to visit the United States and participate in the Seattle Kite Festival. Kite exhibitions, flying, and kite tying performances were held at the Pacific Museum in the United States. The Weifang Giant Dragon Head Centipede Kite was exhibited for 5 days.
September 1984	David Qian, Chairman of the Seattle Kite Association in the United States, selected the Dragon Head Centipede Kite to participate in the filming of the Thomson Film Studio's "Exploration of Wings" film in Guilin, which has been screened in more than 40 countries.
January 1985	The Weifang Kite Culture Exchange Delegation represented China in the 4th International Kite Fair held in Singapore, 1300nly Weifang kites participate in flying.
June 1985	The Weifang kite delegation participated in the Dutch International Kite Festival and won a special medal.
1987	Yang Rupai participated in the Pattaya International Kite Festival in Thailand.
1990	In the Italian International Kite Competition, Weifang kite veteran artist Han Fuling's dragon headed centipede and phoenix kite won the highest award of the Italian International Kite Association, the "Golden Kite Award".

Table 9 Contemporary Weifang Yangjiabu Kite International Exchange Activities Statistical Table (Part)

In addition, with the development, the function of Yangjiabu kites has changed from communication tools and exploration tools to witchcraft and blessing activities, entertainment and fitness programs, and then to today's cultural tourism and cultural and creative products, kites have been given new meanings and at the same time, they are also facing the risk of losing their social functions and folk culture connotations. However, the products of Yangjiabu Kite Design Workshop in Weifang, Shandong Province are modern and beautifully patterned with rich colors, but they fail to reflect the long cultural history and development history, and they do not echo the local culture, so the added value of cultural value is low. They are also not connected with local folk customs, historical background, and cultural ecology, and cannot arouse people's emotional resonance. In addition, due to changes in the management of the cultural value chain, the identities and needs of managers and demanders have changed, so that products need to be continuously developed and innovated to adapt to new environments and identities.

4.3 Development and Cultural Innovation of Yangjiabu Kites in Weifang, Shandong: Cultural Value Chain Perspective

4.3.1 Traditional Folk Art and the Transmission of Cultural Memory

Due to the changes in materials, inheritance groups, and functions, traditional cultural concepts have been impacted, traditional concepts and aesthetics have generated a cognitive generation gap, and cultural inheritance faces the risk of missing generations. The inheritance and continuation of traditional cultural memory are particularly important. Traditional memory is the inherent foundation for the continuation of national history and cultural genes, which perpetuates the essence and characteristics of national culture through the inheritance of national history and culture, the construction of national identity, and the shaping of national image, and at the same time provides a source of learning, understanding and development of national culture for the future generations, helping people to better understand and identify with their cultural background, thus strengthening people's sense of identification with and belonging to the national culture and national identity. sense of identity and belonging. The cultural memory of Weifang Yangjiabu kites contains not only the history of its development but also its local wisdom and folk traditions and customs and culture, such as oral traditions, behavioral traditions, material traditions as well as folk customs and beliefs. The protection of traditional folk art techniques is an important part of the continuity of folk art. In the past, folk art skills were mostly taught orally and practiced. The traditional way of inheritance is not only the production technology but also the memory and cultural identity. The traditional way of inheritance not only ensures the inheritance of skills but also maintains the simple and natural cultural connotation of handicraft production. Yangjiabu in Weifang not only publishes books on kite-making techniques, but also focuses on creating a space for exchanges, where older craftsmen or non-hereditary people can teach and tell stories on the spot, and where young people can learn about the culture, history, and values of their ethnic group and region so that they can better carry on and develop these traditions. Actual participation in practical folk art activities makes it possible to better understand the culture and history of folk art and develop a sense of cultural identity. Folk art is not just a work of art or a decorative object, but also an expression of values and emotions. Only by constantly strengthening the inheritance of traditional folk art and the passing on of cultural memories can folk art be better preserved and developed innovatively.

4.3.2 Re-conceptualization of Traditional Skills and Culture and Preservation of Folk Art Ecosystems

Traditional skills are an important part of folk art and culture, craftspeople put their heart and passion into the creation so that handicrafts have a unique artistic

charm and ornamental value, a great artistic and cultural value, not only the traditional folk culture heritage entity, for the people effectively provide material services, but also can provide a rich design elements for modern design. Yangjiabu in Weifang, Shandong Province realizes the living inheritance of traditional skills by building a platform of skills, such as setting up a Yangjiabu kite-making workshop managed and operated by skillful heirs in the China Yangjiabu Folk Art Grand View Garden[73], the Weifang Kite Museum, and the Weifang Handmade Museum, which provides the conditions for the inheritance and publicity of the traditional skills and promotes the purely handmade way of bamboo Cross strapping as well as hand-painting, the natural traces of this handmade craft can produce a sense of rhythm and emotional expression of structural forms, which are difficult to be replaced by machines, in addition to the aesthetic sense of the kites themselves in their own pristine materials as well as the spatial art formed by such modeling means as shape, light, color, dots, lines, surfaces, and bodies, the pursuit of the harmony and unity of nature and people, and the pristine values, all of which are the inspirations needed by the modern art. This return to the application of traditional handicrafts not only helps to reduce pollution and damage to the environment but also meets the needs of consumers for personalized, customized, and emotional products. In short, the return of traditional folk art design language, this return is not only the respect and inheritance of traditional folk art culture but also the innovation and development of traditional folk art.

Folk art was historically a side business of farmers, subsidizing the family during farming leisure time. As long as there is craftsmanship, what the market needs can be produced. Many of the present kite artists in Weifang used to do zhacai. The four major kite-producing areas all coexistence other handicrafts related to the kite craft, for example, Beijing has a large number of handicrafts left behind by the "Office of Manufacturing"[74] and "Beijing Hundred Crafts Workshops" which served the royal family since ancient times, and the famous ones are paper-cutting, embroidery, clay sculpture, carving, etc. The four major kite-producing areas of Weifang are also famous for their handicrafts related to kites. The famous ones are paper-cutting, embroidery, clay sculpture, carving, shadow puppets, ceramics, and so on. Tianjin has "mud man Zhang" clay sculpture, Yangliuqing New Year's paintings, Nantong has blue printed cloth and carving process, Weifang has New Year's paintings, Yangjiabu New Year's paintings and Gaomi ash New Year's paintings, and so on. Therefore, to protect and develop a certain handicraft, it is important to emphasize the construction and protection of the folk art ecosystem.

---

[73] Yangjiabu Folk Art Grand View Garden (former Yangjiabu Kite Factory), located in Hanting District, Weifang City, Shandong Province, was built in May 1986, which is the largest kite factory in China. The kite field is a folk art grand view garden integrating kite production, New Year's painting printing and folk tourism.

[74] The Zaoban Office, a specialized agency of the Qing Dynasty for the manufacture of royal articles, was established during the Kangxi period and operated until 1924. Manufacturing Office by the emperor assigned by the Minister of the Ministry of the Interior management, has more than 60 professional workshops, and the royal family's living closely related, in addition to manufacturing, repair, collection of imperial supplies, but also involved in the decoration of furnishings, maps (maps) drawing, military manufacturing, tribute to send and receive, the disposal of confiscated and the management of the foreigners and other matters, is the palace has the power of the special institutions.

4.3.3 Cultural Exchange and Integration to Promote the Innovative Development of Folk Art and Culture

Information dissemination and exchange carried out between different cultures can promote mutual understanding and identification between different cultures, promote cultural exchange and integration, and provide impetus for cultural innovation. Weifang Kite Festival is an important cultural activity in Weifang, which promotes the development of the local tourism industry, but it is not only a traditional folklore activity, but also a platform for displaying kite-making skills, inheriting and promoting kite-making skills and local culture, strengthening foreign exchange and cooperation, introducing new perspectives, ideas, and resources, jointly researching and developing folk art and culture, and promoting the exchange and integration of folk art and culture and foreign culture, and it has a significant impact on The inheritance of kite skills and cultural innovation also plays a role in promoting. Yangjiabu kites in Weifang, Shandong Province can learn from the characteristics and elements of kite culture of other regions and nationalities, and integrate them into Weifang kite-making techniques and designs, enriching the development of diversity of Weifang kites as well as promoting cultural innovation beyond. Local culture can draw on the excellent elements of foreign culture for self-renewal and development. At the same time, foreign culture can also adapt to the needs of the local society and the characteristics of the local culture to make self-adjustment and change. The collision between local and foreign cultures can also bring opportunities for cultural integration. When two cultures merge, they will penetrate and integrate, forming a new culture and cultural chain, which will provide development opportunities for the inheritance and innovation of traditional folk art (Qi, 2022).

Conclude

Weifang Yangjiabu kites have gradually completed the transformation from local folk customs to commercialization and international cultural activities, boosted the development of the city's tourism industry, formed a good economic cycle chain and cultural value chain, and greatly promoted the innovative development of Weifang Yangjiabu kites, as well as the opening up of the local area and the economic development of Weifang Yangjiabu kites, and in the process, the ecological environment, the mode of production, the mode of inheritance, the function, the cultural connotation, the audience and so on have changed and altered. In this process, its ecological environment, production mode, inheritance mode, function, cultural connotation, audience, and so on have all changed and altered. The administrators of kites have also developed from the family to the village and county government, to

the municipal government and the state, and now it has become an important international festival. It is precisely because of the changes in these factors that the identities as well as the needs of both managers and demanders have changed, thus requiring continuous development and innovation of products to adapt to new environments and identities. The cultural and artistic resources possessed by Yangjiabu Kites in Weifang, Shandong Province, and the corresponding research and practice process will be described and discussed in the next section.

พหูนํ ปณฺฑิโต ชีเว

CHAPTER V

Innovative Design of Kites in Yangjiabu, Weifang, Shandong Province

Introduction

This chapter is about the design creation and practice based on Shandong Weifang Yangjiabu kites based on the research in the previous chapters, the organic creation based on the cultural connotation, artistic characteristics, design concept method, and development trend of the kite so that the material and modeling elements of Shandong Weifang Yangjiabu kites can be transformed and applied to enrich the artistic and decorative language, it is the exploration and practice of the decorative language as well as the cultural innovation, and it is the exploration and practice of the decorative language and cultural innovation, and it is the exploration and practice of seeking to It is an exploration and practice of decorative language and cultural innovation, seeking to break through the traditional mode of kite elements and modern decorative design of cultural innovative design solutions, and the interpretation and explanation of the results of the application of design practice. Focusing on the elaboration of design concepts and cultural innovation ideas, I try to analyze and study the status of Yangjiabu kites in Weifang, Shandong Province in the process of modern cultural innovation, as well as the development trend and suggestions. In this way, this chapter is divided into six subsections for research and discussion. The first section introduces the artistic resources of kites; the second section introduces the case analysis and interpretation of current works; the third section introduces the design concepts and ideas of application design practice; the fourth section is the generation of sketches and the discussion of screening; the fifth section is the application design practice based on the kites of Yangjiabu, Weifang, Shandong Province; and the sixth section is the evaluation and improvement of the application design results.

พหูนํ ปณฺฑิโต ชีเว

5.1 Analysis of Cultural and Artistic Resources of Kites in Yangjiabu, Weifang, Shandong Province

Among the kite families in China, Weifang kites have a long history and a rich and wide range of themes. With its peculiar choice of materials, exaggerated and deformed design, brushwork techniques of painters, and ingenious use of mechanics in flying, it has formed a strong local characteristic and unique charm and has been famous in ancient and modern times and at home and abroad. After a long period of development and innovation, Weifang kites have gradually formed unique artistic characteristics and styles. It is characterized by an exquisite selection of materials, beautiful modeling, exquisite sticking, vivid images, fine painting, many varieties, and flexible take-off. The themes of Weifang kites are very wide, including characters, flying birds, fishes and shrimps, artifacts, historical figures, myths and legends, and so on. In addition, kite artists also paint the above themes into decorative patterns to symbolize good luck.

Weifang kites have a strong local life flavor and vivid charm, and they are made by adopting the strengths of many families. In the past, when it comes to Weifang kites, there was the saying "ten kites, nine butterflies, nine butterflies, and nine new ones", and people used "Lu Butterflies" to generalize the characteristics of Weifang kites, which is the most representative of the Weifang kites. The kites that best represent the characteristics of Weifang kites are those characterized by "centipede". At the 2012 First China Intangible Cultural Heritage Expo[75], a total of 622 intangible cultural heritage protection projects were exhibited nationwide. In the end, the Weifang kite-making technique represented by the "Dragon Head Centipede" won the gold medal. The "Dragon Head Centipede", "Immortal Crane Child", "Lei Zhenzi" and "Magu Xianshou" have become the most popular kites in Weifang. have become the representative works of Weifang City School kites. By applying the traditional techniques of Chinese brush painting to the drawing of kites, it has formed a unique style of beautiful shapes, fine-tying work, and brilliant colors, and has become an important school of Chinese kites (Wu, 2019).

Kites are stylized crafts made in two-dimensional space, which are created by people according to the law of formal beauty, from the stylized content and thematic form of kites. It can imitate all things in nature and thus reproduce all things in nature. The modeling and theme of Chinese kites are closely connected, fundamentally speaking, the external modeling of kites is a means to illustrate the theme of kites and to shape the image of the theme, and different themes are expressed by different modeling, pursuing that the objects tied up are similar to the original objects. The production of kites contains many knowledge and skills such as physics, painting,

[75] It is a national intangible cultural heritage fair in China with wide influence, large scale, high specification, many projects and all categories.

calligraphy, folklore, and craftsmanship, so it is a craft work that combines various arts in one.

Weifang kites are extremely rich in varieties, such as birds, animals, fishes and insects, figures, and flowers. It is recorded in "Chunming Caifeng Zhi" that at that time, there were such varieties of kites as "Nezha, Liu Hai, Humming and Haha, Centipede, Butterfly, Dragonfly, Catfish, Triple Yang Kaitai, and Seven Magpies Dengzhi", and so on. The South Harrier and North Kite Kao Gong Zhi contain "double swallows, winged swallows, thin swallows, double carp, colorful butterflies, crabs, double children" and other varieties. In recent years, the "Weifang International Kite Festival" has had more varieties than we can mention. In a word, all those strange and strange natural things can be shown through kites. In terms of styling, the kites can be written in shape, sent in shape, or in both shape and god, which can be said to be of different styles, reflecting the essence of traditional styling.

For the static beauty of kites, it is not only that it lies in chic modeling and many styles, but more importantly, it integrates calligraphy, painting, and craftsmanship, forming a kind of static in motion, static in motion, and endless changes in unity. It is generally believed that the southern kites are slender and delicate, while the northern kites are eye-catching and rough, each with its characteristics and leading the way.

Weifang kites emphasize the contrast, especially the color, pay attention to the visual effect of high altitude, and combine with the craft of Weifang woodblock New Year's paintings, which has a unique style. It can be seen that the kites not only embody the beauty of the art of painting but also the styling kites with the main body of the calligraphy can be said to be an original creation. All in all, no matter the aspects of modeling, painting, calligraphy, and craftwork, kites have formed a kind of static beauty and a strong sense of unity.

"Folk art modeling has inherited the expressive language of primitive art, and on the whole expresses three-dimensional effects with flat or two-dimensional thinking, mostly using straight lines and regular curves (such as circular and spiral ones), and seldom seeing tilted lines and irregular curves; it is generally characterized by symmetry, repetitiveness, and rhythmic features." From the point of view of the modeling of Chinese folk art, figurative modeling, harmonic modeling, symbolic modeling, functional modeling, etc. are the common modeling laws of folk art, and the same living customs, religious thoughts, regional environment, emotional and human factors and so on have formed their own different modeling characteristics and aesthetic tendencies. From the analysis of the kite modeling style, it is bionic modeling concerning natural objects, and it is commonly used to express single modeling and symmetrical structures. In the process of making kites, the prototypes of natural objects can be skillfully simplified to the shape of bamboo strips and then fill the shape with paintings on paper. For example, characters, animals, flowers and

birds, insects and fish, auspicious patterns, and words can be used as the subject of kite painting so that the shape of the kite becomes the carrier of the content.

True art has the playful pleasure of imitating the prototypes of natural objects, but it also satisfies a deep psychological need, not just the pure instinct of imitation. For experienced folk artists, the free creative mood and the ability to improvise without restraint are the direct manifestations of their usual "preparedness".

5.1.1 Moral of the Kite

Weifang Yangjiabu kites are one of the representatives of traditional Chinese folk art forms, which are loved by people for their unique shapes, rich colors, and auspicious meanings. Yangjiabu kites have a long history of production, exquisite craftsmanship, varied shapes, bright colors, and profound meanings. First of all, the shapes and patterns of Weifang Yangjiabu kites imply auspiciousness and beauty. In the shapes of kites, animal images of phoenixes, dragons, fish, swallows, and other auspicious animals, as well as natural landscapes such as flowers, birds, and landscapes are often used, which not only have beautiful symbolic meanings but also express people's reverence and longing for nature. In terms of kite colors, bright colors such as red, yellow, and green are often used to symbolize auspiciousness, prosperity, and vitality, while blue and white are used to express calmness, purity, and beauty. Secondly, the symbolism of Weifang Yangjiabu kites is also related to people's daily lives and beliefs. In ancient times, people believed that kites could take away troubles and misfortunes and bring good luck and happiness. Therefore, during traditional festivals such as Spring Festival and Qingming Festival, people often fly kites to pray for good luck and happiness. Meanwhile, kites are also often used to express people's admiration and remembrance of their ancestors, as well as their belief in and prayers to the gods. Finally, the symbolism of Weifang Yangjiabu kites is also related to people's cultural traditions and values. Auspiciousness, harmony, and beauty are very important values in traditional Chinese culture, and kites, as a traditional art form, embody these values. For example, kites are used as gifts for elders to wish them a long and healthy life, fish kites are used to symbolize "surplus", which is a metaphor for a rich life, double gourd kites are used to symbolize the harmonic sound "gourd", which is the same as the Chinese word for "gourd", and double gourd kites are used to symbolize the goodness of life. The double gourd kites use "gourd", which is the harmonic sound of "Fortune", to symbolize promotion and wealth. In the process of making kites, artists integrate people's expectations of life, reverence for nature, and insistence on faith into them, which makes kites not only a kind of artwork but also a kind of symbol of cultural traditions and the embodiment of values. To sum up, the symbolism of Weifang Yangjiabu kites is profound and rich, which not only expresses people's expectations for life, reverence for nature, persistence in faith, etc. but also embodies the unique charm and values of traditional Chinese culture.

Figure 31 Shandong Weifang Yangjiabu Kites

5.1.2 The Beauty of Kite Materials

The beauty of the materials of Weifang Yangjiabu kites is mainly expressed in the following aspects. First of all, the materials are well selected. Yangjiabu kites mainly use bamboo, paper, silk, and cotton thread as the main materials, which have unique advantages in kite making. Bamboo is light, strong, and flexible, which is suitable for making the skeleton of kites; paper and silk are soft, light, and thin, which is suitable for drawing patterns and colors of kites. In addition, the materials have a natural beauty. The materials used in Yangjiabu kites are all products from nature, such as bamboo, silk, and paper. These materials themselves have natural beauty, such as the texture of bamboo, the softness of silk, and the simplicity of paper. In kite making, the natural beauty of these materials is skillfully utilized and highlighted, so that the kite as a whole presents a natural and harmonious beauty. In addition, the combination of materials together can form a unique beauty. In Yangjiabu kites, the combination of different materials also shows a unique beauty. For example, the combination of bamboo and paper or silk, or the combination of bamboo and cotton thread makes the kite have both a strong skeleton and a soft surface, forming a unique visual effect. The combination of these different materials makes the kite as a whole present a material beauty. To summarize, the material beauty of Weifang Yangjiabu kites is mainly manifested in the aspects of well-chosen materials, natural beauty, combination beauty, and craftsmanship beauty. These features make Yangjiabu kites present a unique sense of beauty visually, laying the foundation for them to become a kind of traditional folk art with artistic value.

5.1.3 Kite Craft Techniques

The craftsmanship of kites also has a unique beauty. The beauty of the craftsmanship of traditional handicrafts lies in their exquisite skills and ingenious designs. Through skillful techniques, craftsmen process materials into exquisite crafts. The embodiment of this beauty includes both the handling of details and superb craftsmanship, as well as the overall harmony, such as the bamboo handling

techniques, the drawing of patterns, and the way the bamboo is tied to the cotton thread. In the process of making Yangjiabu kites, the craftsmen also show their superb craftsmanship in the processing and use of materials. They skillfully use a variety of tools and techniques to process bamboo into skeletons of various shapes and sizes, to draw silk into various patterns and colors, and to reproduce woodblock prints onto the kites. When processing materials, artisans use a variety of techniques and tools to process materials into shapes and sizes suitable for kite-making (Zhang, 2016). For example, they can process bamboo into various shapes of skeletons through cutting, sanding, bending, and other techniques; at the same time, they will also draw patterns and colors on paper or silk through painting and carving techniques to increase the aesthetics and artistic value of the kites. These exquisite techniques make the kites as a whole present a beauty of craftsmanship.

5.1.4 Kite Composition

The composition of the kite has as important an influence on the artistic effect of the kite as the outer contour modeling. Moreover, the outer contour modeling of kites is often closely connected with the composition and should be considered in a unified way. Based on certain programs, folk art modeling is characterized by arbitrariness and subjective initiative to make the composition creativity unlimited. For example, eagles, swallows, butterflies, dragonflies, and other birds and flying insects. The more real the better, taking the beauty of its natural state. Artists are not formally trained in sketching, and most of them are handed down from generation to generation in a way that they remember and teach by word of mouth, thus there is a certain degree of programming in the image modeling. Kite is the unity of collective consciousness and individual consciousness of folk art modeling activities, it is a concrete thing related to people's interests formed in the long-term social practice activities, and the folk interpretation of kite inheritance is the reaction of collective social behavior and cultural way. The randomness of kite modeling techniques is often closely related to its special survival environment, the rudimentary working conditions, the roughness of materials, and the haste of time, which refers to those compositions that are made from the decorative beauty and the appropriate processing and deformation of those natural objects. The cultural situation of the audience groups will bring different degrees of influence on the creation and will produce unexpected effects for all the disadvantages of kite making instead.

5.1.4.1 Symmetrical, balanced layout

Most Chinese kites are symmetrical, therefore, they mostly use symmetrical compositions. Symmetrical forms can be seen everywhere in nature, such as the feathers of birds, the leaves of flowers and trees, and so on. Therefore, symmetrical forms have the simple beauty of natural, stable, even, coordinated, neat, elegant, solemn, and perfect visually, which is in line with people's visual aesthetic habits.

Symmetry in plane composition can be divided into point symmetry and axial symmetry. Assuming that a straight line is set up in the center of a graphic, the graphic is divided into two equal parts, if the shape of the two parts is the same, the graphic is axisymmetric, this form of composition is called symmetry and balance of the composition. Some also need to consider the effect of the use of the time, so the creation of techniques, and image structure are extremely rich. Symmetrical modeling can be divided into "symmetrical outward" and "symmetrical inward", i.e. centrifugal and centripetal symmetrical modeling (Wu, 2023, p.50-52). Among them, symmetry and asymmetry are based on the condition of the space occupied by the pattern, which accounts for the layout of the organizational unit of the composition pattern; while balance and imbalance refer to the distribution of the power of the various parts of the pattern, which determines the balance of the pattern's aesthetic sense, through the symmetry and balance of the compositional techniques, the pattern shows a different visual effect from the general depiction of the pattern, which is more organized, and this is precisely the decorative properties of the pattern with the important prerequisite. This is precisely the important premise for patterns to have decorative attributes. On the whole, this kind of composition is mostly found in various pattern compositions of folk art, where the layout is composed in a balanced way between the center and the surrounding area, and the surrounding area is always filled with various symbolic symbols for decoration.

5.1.4.2 Conceptual layout

The special living environment of folk art and the high creative skills possessed by kite artists make folk art show a unique conceptualization of composition, and kite artists with high skills often pour a strong conceptual component into their works when they create an image, and kite artists use primitive imagery as the accumulation, and their sharp visual observation and skillful techniques, which have been gradually formed after a long period of refinement, as the means of creation, are often "familiar with the heart" in the process of creating images. In the process of image creation, they often "know it by heart", and the works they produce can reach the realm of incomparable proficiency, without thinking, and can be made by hand, which not only has a comprehensive generalization but also can be raised to the height of philosophical aesthetics. People used to call this kind of composition "Idea Composition", and the idea composition can be categorized into two main types, one is the "skillful" work created by the highly skilled kite maker, and the other is the "tricky" work created by the limited conditions of the creation, and the "tricky" work produced by the simplicity of the kite maker. One is the "clumsy" works created by the limited conditions of creation. These two types of works together show "carelessness" or "improvisation" in compositional techniques. Composition on the "simple", "random" or even "strange", "grotesque" and so on.

5.1.4.3 Distributed layout

Kite is in the plane paper to complete the picture composition, the basic language symbols are decorative dots, lines, and surfaces, coupled with the limitations of the material, so that the object and the scene from the three-dimensional space three-dimensional image into a two-dimensional space plane image, through the expression of the material to boldly take away, deletion of complexity and simplicity, the use of concise lines for the generalization, so that the picture focus on the outstanding, to enhance the expressive power of the work, the expression of the plane with the eyes of the The world of objects. Under the creator's pen, the pattern composition of the kite can have no volume, no space, no perspective, and no regard for proportion, with experience and spirituality to take and give up whatever they want to create naturally and boldly. To express their ideas, creators can break the objective laws of nature and the limitations of space and put objects of different time and space on the same plane. This kind of planarization with the help of static can express three-dimensional, four-dimensional, or even multi-dimensional space, and through dynamic thinking, continuously depicts the world in one's mind. The pattern composition of the kite makes great use of the limitations of paper, to roam freely in the limitations, to change the impossible into the possible, and to simplify the three-dimensional world into two-dimensional space. Infinitely far space and infinitely complex forms are all placed on a plane, therefore, the unique expressive power of kite pattern composition is realized based on the thorough concept of two-dimensional space.

This kind of compositional thinking of kite patterns is not limited by life practice and subject matter and creatively organizes several images to produce coherence, contrast, and foil. This expressive method of planarizing objects enhances the subjectivity, temporality, three-dimensionality, and comprehensiveness of the composition, and its ultimate purpose is to pursue the integrity of modeling. The psychology of seeking completeness is the root of all these. In addition, the composition and performance of the pattern is not a simulation or reproduction of a static visual image of a fixed point of view, but a dynamic dialectic that fully synthesizes sensibility and rationality. Folk art patterns do not pursue the sense of depth in the perspective of composition but have the aesthetic recognition of "seeing more, seeing all", which embodies the whole picture of things in the two-dimensional space.

In a word, the composition and modeling of Weifang kites are characterized by their static modeling structure conveying the comprehensive form from plane to three-dimensional, and the complete composition and modeling aesthetics conveying folk culture and information, which is a folk art closely related to folklore and folk culture and life.

5.1.5 Kite Flower Patterns

Traditional Chinese graphic symbols are regarded as part of the creative elements used in modern visual design, conveying visual information with traditional Chinese culture and oriental meanings, forming a personalized visual image, and at the same time completing the theme and content of the creation. Design is purposeful planning, and graphic design is one of the forms that these plans will take. In graphic design, the designer needs to use visual elements to communicate his ideas and plans, using words graphics, and colors to convey the information to the public, so that people can understand his ideas and plans through these visual elements, and this is the definition of design. At present, what attracts the audience's attention in most of the design works in China is often the visual new image that is rich in characteristics and has profound cultural content. On the platform of international design, in the collision of domestic and foreign cultures, traditional graphic symbols with national characteristics are instead more likely to reflect the unique charm of traditional national culture and inner spirit.

The graphic design of Yangjiabu kites fully reflects the living customs and aesthetic interests of local people. The following are some specific reflections. Mythological legends and historical figures often appear in the patterns of Yangjiabu kites, such as the Eight Immortals, the Longevity Star, Guan Gong, Zhang Fei, and so on. The choice and design of these figures reflect the local people's respect and inheritance of history and culture, as well as their love and belief in myths and legends. Auspicious patterns, such as dragons, phoenixes, unicorns, lions, etc., also often appear in the patterns of Yangjiabu kites. The selection and design of these auspicious motifs reflect the local people's pursuit of and belief in auspiciousness, happiness, longevity, and other beautiful symbols. The pattern design of Yangjiabu kites also incorporates local flavors, such as rural scenery and folk activities. Due to the limitations of ancient technology, people were unable to reasonably explain some natural phenomena and often sentimentalized to the gods to bring solace to their souls. There are many patterns of such themes about myths, ghosts, and spirits, which are mainly derived from myths and legends circulating in the folklore, such as Zhong Kui catching ghosts, Lei Zhenzi, Sun Wukong, and Magpie Bridge Meeting are common patterns The selection and design of these elements reflect the local people's love for their hometowns and the inheritance of their traditional cultures (Wu, 2019). The pattern design of Yangjiabu kites is also highly decorative, often using symmetrical or repetitive compositions, as well as bright color schemes. This decorative design not only makes the kites look more beautiful but also reflects the aesthetic taste of the local people.

The most important thing is that Weifang Yangjiabu kites have a close relationship with New Year paintings. Yangjiabu's New Year paintings and kites are both traditional folk arts, reflecting each other with strong folk characteristics. In

terms of motifs, both Weifang Yangjiabu kites and New Year paintings reflect the local people's living customs and aesthetic interests. For example, they both often choose myths and legends, historical figures, auspicious patterns, and so on as their themes, which not only reflects the local people's respect for and inheritance of history and culture but also reflects their love and belief in myths and legends. In addition, the pattern design of Yangjiabu kites also incorporates elements of local flavor and folk activities, which reflects the local people's love for their hometown and the inheritance of traditional culture. Meanwhile, the production processes of Weifang Yangjiabu kites and New Year paintings also draw on and influence each other. For example, in the production process, both kites and New Year paintings use techniques such as carving and painting, which are applied in both and draw on and inspire each other. In addition, in terms of production materials, both kites and New Year paintings also use paper pigments, etc. These materials are used in both and influence and develop together. Weifang Yangjiabu kites and New Year paintings are interrelated and mutually influential, and together they constitute a unique local folk culture (Lin, 2018, p. 57). As an important part of Chinese folk culture, Yangjiabu kites not only have a deep historical heritage but also possess unique value in terms of artistic aesthetics, education promotion, tourism development, and cultural exchange. First of all, it can transmit national culture. Yangjiabu kites originated in Weifang, Shandong Province, China, and have a long historical origin. As a traditional handicraft, it carries rich national cultural connotations, including myths and legends, historical figures, local customs, and so on, and has a profound cultural accumulation. The choice of patterns and themes of these kites reflects the beliefs, values, and aesthetic interests of the local people, and is of great significance to the inheritance and promotion of the excellent traditional culture of the nation.

Figure 32 Shandong Weifang Yangjiabu Kites

Yangjiabu, Weifang is one of the three major production areas of New Year paintings. The artistic characteristics of Yangjiabu woodblock prints are complete composition, rich in decorativeness, exaggerated modeling, concise lines, roughness and simplicity, strong contrasts, upright and smooth, and full of colors. The traditional

Weifang kites are extremely similar to the style of woodblock prints in terms of their drawings, and these characteristics are also very obvious in the kites, especially in the drawing, which absorbs the characteristics of large red and large green of the Yangjiabu woodblock prints. The pigments used for painting the kites are magenta, green, blue, yellow, purple, etc., which are used for printing the woodblock prints, and the colors of ultramarine and yellow, white, and red constitute the contrasting hues. In the composition and layout, major color blocks are thickly painted, producing a warm and bright artistic atmosphere. Weifang Yangjiabu kite creation mainly absorbed the characteristics of Yangjiabu woodblock prints, "mostly auspicious and praying for blessings, full composition, colorful, its color drawing emphasizes the same or inter-color with the original color and less use of compound color, attaches importance to the bright and vivid, the pursuit of contrast, rich in visual effects, and thus has a strong local flavor". Especially from the Qing Dynasty onwards, the popularity of the flourishing Yangjiabu woodblock prints production industry and Weixian city painters' painting of god axes[76] provided the conditions for the painting of folk kites, and the folk artisans transplanted the craft of woodblock prints to kites, and even mounted and glued the readymade New Year's paintings directly onto the kites according to their outlines, which formed a distinctive artistic feature. The formation of this kind of folk traditional painting style is directly related to the Weifang folk paintings, which are suitable for both near and far viewing, there is another outstanding feature of Weifang kites in painting, which is the combination of painting and tying, which achieves the effect of "Hanging on the wall is a New Year's painting, and putting it in the sky is a kite", which precisely describes the special spatial viewing effect of Weifang kites. This precisely describes the special spatial ornamental effect of Weifang kites, so Yangjiabu kites have a very high aesthetic value in art (Li, 2015, p. 56).

The kites are styled in a variety of ways, including various images of people, animals, and flowers, reflecting the imagination and creativity of the local people. Meanwhile, the kites have bright and vivid colors, exquisite and delicate patterns, and exquisite craftsmanship, which give people the enjoyment of beauty. To sum up, the pattern design of Yangjiabu kites fully integrates the local people's living customs and aesthetic interests, and has both historical and cultural values as well as unique artistic values. The artistic style of Yangjiabu kites is unique, with strong folk characteristics and local flavor, which is a concrete embodiment of local wisdom.

The reason why traditional folk modeling is flourishing in the rapidly developing market economy era is that it is an artistic way used by people to express the pursuit of a happy life and beautiful emotions, because it has great artistic value and provides rich design elements for modern design, and at the same time it is a product of people's ideological concepts. Chinese folk art is an art that is inseparable from the life of the people. Folk art is not only to satisfy the spiritual needs of the people but

[76] Divine scrolls, also known as Divine Fairy Paintings, are paintings of gods and fairies that are framed and made into scrolls or paintings that are specially hung in temples.

more importantly, it provides material services for the people and becomes an indispensable part of real life. From the intuitive, vivid, and other characteristics of the folk modeling language, it is not only able to accurately convey information, in helping people to understand the meaning of the text and to the text of the insufficiency of other aspects but also played a language and text is difficult to reach the role of the illustration, the use of folk modeling art techniques for graphic work design, has played from folk modeling elements to modern design works in the replanting of the visual communication is stronger.

The inheritance, extension, and development of traditional Chinese graphic symbols in modern visual design is naturally not a simple copy, but to adapt to the aesthetic needs of people in modern society and recreate traditional graphic symbols. It is necessary to take its "shape", extend its "meaning" and transmit its "spirit" based on full understanding and careful selection of traditional graphic symbols. With modern aesthetic concepts and design principles of the traditional graphic symbols in some of the modeling elements to transform, refine, and play, so that it is rich in contemporary characteristics; or the traditional graphic symbols of the modeling methods and forms of expression used in modern design, New Year's Paintings are known as decorative folk prints, folk New Year's Paintings are unique to China is a form of folk art, the famous Yangjiabu woodblock New Year's Paintings, also known as the "Weixian New Year's Paintings". The famous Yangjiabu woodblock prints, also known as "Weixian New Year Paintings", are famous for originating from Yangjiabu in Weifang, Shandong Province. It is said to have a history of more than three hundred years. The production process of Yangjiabu New Year paintings at first did not use overlay, carved outlines with wooden boards, ink printed on paper, and then add color, and then developed into a color overlay; the performance style has door painting, window, small horizontal phi, square tribute paper, lucky lights and so on; to the innovation of folk New Year paintings since the Qing Dynasty, the folk artists absorbed foreign influences, the Western focus of the perspective approach to the New Year paintings, creating the "New Year paintings", the composition, and the "New Year paintings". Composition, the creation of the "Thai and Western brushwork" is a breakthrough in the traditional New Year's paintings to line modeling. The resulting New Year paintings are full of composition, brightly colored, decorative, and have a strong local flavor (Li, 2015, p. 56). In addition, from the design concepts advocated in recent years, the styling patterns of many design works are more inclined to use color schemes that integrate traditional patterns with modern colors.

5.1.6 Kite Color Scheme

As a folklore item, the color of kites points to the secular life, reflecting the accumulation of people's production and life experience as well as containing the people's conscious awareness, for entertainment, kites broaden their aesthetic function

in terms of color vision. The traditional Chinese concept of color has a certain symbolic nature and is endowed with special emotions and cultural concepts, and people's use of color has become a subjective symbol, a manifestation of emotions. After the accumulation of cultural concepts and aesthetic interests over the generations, although the various colors of kites symbolize different contents, the main keynote still conveys the emotions of joyfulness, auspiciousness, and cheerfulness. The color scheme is bright, with high brightness and purity, so that it can remain debatable and vivid even when viewed from a distance. In the color matching pay attention to the sharp contrast, pay attention to the color matching law, to achieve the effect of coordination and unity and strong contrast in the whole. The following two aspects are the key to the color harmony of kites: firstly, due to the functionality of kites, the use of large color blocks has become the dominant form of kite coloring, and the combination of large color blocks and small color blocks is also very delicate, for example, the combination of large color blocks and large color blocks will be more simple, the arrangement of small color blocks can add the sense of details of the kite, and the combination of large color blocks and small color blocks can enhance the intuitional effect of the kite; Secondly, in the coordination between kite outline lines and the colors used, light colors are often used to outline lines when drawing heavy colors, and vice versa, heavy colors are used to outline lines, which contrasts with colors more intense (Lv, 2016). All in all, the colors of traditional Chinese kites follow nature but are not constrained by nature and are a reflection of emotions. There is also the concept of the five elements and five colors, "The five elements are the Chinese law of thinking and the Chinese belief in the cosmic system." The five elements have a very direct impact on the application of traditional Chinese colors. The early concept of the five colors, which only contains utilitarian connotations of reality, when incorporated into the framework structure of ancient Chinese cosmology, intermingles with traditional philosophical concepts, religious concepts, and ethics and morals, making the connotations even richer and more stable, and thus the yin and yang, the five elements, and the five elements[77] are the foundation and root of traditional Chinese colors. Although the concept of five elements and five colors can not fully explain the many phenomena of kite coloring, the choice and combination of color cognition can not be separated from this concept. The five elements themselves have the relationship of interlocking and intergrowth, and at the same time the correspondence with colors, seasons, and directions. Different colors correspond to seasons, i.e., green to spring, summer to yellow, autumn to white, and winter to black. For example, swallow kites in Cao's kites are mostly colored in blue, especially blue pot-bottomed kites, which use blue as the base color, reflecting the concept of five elements and five colors. Blue belongs to one of

[77] Yin-Yang and the Five Elements can be divided into "Yin-Yang" and "Five Elements", but they complement each other, the Five Elements must be combined with Yin-Yang and Yin-Yang must be combined with the Five Elements. Yin-Yang and Five Elements are the core of Chinese philosophy.

the five traditional Chinese colors[78], "qing", which is recorded in the ancient texts as "qing, the color of the east" and "qing, the color of life, the color of the time when things are born". Cyan symbolizes the east, spring, and nature in the concept of five colors. In the spring, swallows flying south, kite flying and recreational activities are in harmony with the symbolism of the color green. The five elements of gold, wood, water, fire, and earth correspond to the five directions of east, west, south, north, and center respectively. For example, the five-dragon kite painted by Ha Yiqi has five dragons in total, with red in the middle, which corresponds to "fire" in the Five Elements, representing blood and symbolizing life, and green is endowed with vitality. The low-color black pot sticker kites are black and white. The "heaven and earth" mentioned in the I Ching[79], that the boundless sky is black, black is the highest among the five colors, and is also regarded as the most solemn color, which can create unique imagery aesthetics and become the accumulation of traditional Chinese color aesthetic ideals. And because black is a static color and white is a dynamic color, black is yin and white is yang, forming a contrast between static and dynamic, yin and yang, and the visual effect is excellent when looking from afar. In a word, the kite color is influenced by the concept of five elements and five colors, but this color concept is not decisive in the kite color setting, and the kite color setting points to more secular life.

5.1.7 Artistic Expressions to Satisfy Visual Effects in Flight

From the color performance characteristics of Weifang kites, the picture determines that kites and general paintings have different feelings in viewing, and kites flying in the sky have to satisfy the visual effect of the color performance form. People's sight distance for general paintings is generally required to be within a few meters, while the kites flying in the sky are less than tens of meters away and more than hundreds of meters away. The color aspect of kites needs to meet the effect of sight distance of distant view. Therefore, the colors on the kite should be vivid, the contrast should be strong, and the color blocks should be large to meet the requirements of the distance viewing effect. The ornamental of kites not only depends on the feature of being a decoration hanging in the room but also depends on the beautiful flying posture it presents in the sky. The author thinks that as long as the kite flies to the blue sky, it has the real meaning of life and soul, and its value is the flight in the sky. If we design and draw the color of the kite from the effect in flight, we should also have a bright color, strong contrast, big and unrestrained color block, which is unified with the requirement of the effect from afar. In the process of flying, the kite often encounters the light from the back. Compared with different materials and pigments, the light transmission effect of kites is very different. Therefore, in the

[78] The five traditional Chinese colors refer to cyan, ruddy, yellow, white and black, which are recorded in the Zhou Li - Kaogong Ji and are considered to be the most basic and important colors.

[79] The I Ching is an ancient classic that describes the changes in heaven and earth. There are three I Ching books: Lian Shan, Gui Zang and Zhou Yi, of which Lian Shan and Gui Zang have been lost, and only Zhou Yi survives.

color treatment of kites, the effect of natural light transmission should be well used. Good and bad utilization will directly affect the visual effect of the kite. To achieve the translucent effect, it is necessary to use sharp, large, and contrasting transparent colors. One of the reasons why the traditional Chinese method of painting kites uses "magenta" colors is because of their good light transmission. In addition, for a flying kite, the sky is its big background, and this factor is another very important objective factor besides color. Because the traditional Chinese kites are only in black and white, they are especially bright and colorful when flying in the blue sky. So now the kites in the pattern of color to avoid the sky blue similar colors, and strive to highlight the eye-catching features, in the specific design, pay attention to the full order, is the picture of the color has an inherent order of the beauty, avoid chaos, give a sense of stability and a sense of unity. One is the use of large color block processing, large color block processing there are two ways: one is the direct use of large color blocks; the second is to add some of the same small color blocks together, from a distance a large color block. These colors are very distinctive in the blue sky, only the application of green to pay a little attention, it is best not to use the green and the blue sky directly, but to give it painted on the border of other colors, so that the outline is more prominent. Flying butterfly kites and dragon head centipede kites fly due to the distance of the kites, sparse and dense between the kites, criss-cross, interspersed with each other, the kite pattern of the virtual and the real, the height of the kites, forming a rich sense of rhythm and rhyme. The colors of the kites have high color contrast, and in the reconstruction of the kite's color collection we can see the strong influence of life expressed by the bright red and yellow, with the fluent brush strokes seeking simplicity amidst complexity, the coordinated expression of grouping colors, and the strong color contrast with the exaggerated ornamentation to adapt to the effect of the kite art from afar.

Figure 33 Yangjiabu Kites in Flight

From the point of view of space modeling art, people strive to shape a sense of the vivid image of art too. Like the art of calligraphy in the flow of lines and through the point of painting modeling performance of the "spirit", like the ancient garden architecture in the large eaves, frescoes in the flying patterns, etc., all reflect a dynamic beauty, as well as the use of light and dark in Chinese painting, contrast, and

the virtual and real and show the "rhyme and the "qi yun" in Chinese painting, all of which embody a kind of vigor, a kind of vitality, and a symbol of dynamism. Therefore, people in the evaluation of calligraphy and painting works, often with "vivid and evocative", "lifelike" to describe, based on this, it can be imagined that the artist is engaged in space modeling art creation, and strive to make the static art to show dynamic beauty, the so-called dynamic beauty is given to it by the appreciators, which not only gives people a sense of vibrant and energetic artistic image but also is a natural species that is false and floating. When a kite takes off at a high altitude by wind power, it gives people a kind of dancing and lifelike flying beauty. Especially like bats, butterflies, centipedes, and eagle-style kites, it is hard for people to recognize whether it is real or fake. This dynamic beauty is the essence of the aesthetic value of kites, and it is because of this that it is attractive and enjoyable, while the flying beauty presented by kites, though different from the former concept, is palpable and vivid in its image.

Watching a kite flying, on the other hand, is a large-space, long-distance viewing, capable of obtaining a sense of beauty in an infinite space. People will not be indifferent to the kites flying freely in the boundless space. Moreover, people will not only stay in viewing the flying posture of kites, but also with its vivid and real artistic modeling, kites continue to fly in the high altitude of the natural world, attracting people to view it and feel it, thus evoking a lot of wonderful associations, and thus entering the stage of aesthetic meditation, to obtain a sense of beauty in the limited space, and to feel the infinitely subtle changes as in the appreciation of Beethoven's symphonies, so that people will fully appreciate the infinite space with the help of kites, and then realize that kites can be used to fly in the infinite space. Kites fully appreciate the beauty of infinite space. "They don't care about what happens in reality, they don't respect anatomy and perspective, and they don't abide by the laws of gravity and space-time. Animals, monsters, and simple figures often float in the air or cluster together in unnatural relationships. His seemingly esoteric language is understood as transcending the world to a degree unattainable by all." This quote is from the famous contemporary American psychologist Atituan commenting on the work of the well-known contemporary painter Chagall. It is an apt description of folk art's transcendent stylistic patterns. Commenting on Chagall's stylistic rules, Atenti adds, "It is a new combination of abstract concepts embodied in visual forms and aesthetic relationships. This conceptual mixture is a celebration of love and joy. Fish leaping out of the sea, people embracing in the sky, spinning happily. We can see that this aesthetic approach lies in providing the spontaneous structure of the primary process with the structure of the secondary process."

From the above, kites have the aesthetic characteristics of static, dynamic, and spatial modeling beauty. As a folk art object, the kite "is not a simple patchwork of materials and shapes, but an art form full of cultural significance, synthesizing various factors such as nature, history, society, and culture, and its image deeply conveys the

connotation of the national culture and becomes a medium of cultural significance." It is not only a kind of sports game activity, but it has become a beautiful thing that generally attracts interest in our life, which not only holds the beautiful free wishes and ideals of human beings but also has its aesthetic value.

5.2 Analysis of the Current Shandong Weifang Yangjiabu Kite Art Products

As a cultural heritage with deep local characteristics, Yangjiabu kites in Weifang, Shandong Province have been attracting much attention. Whether it is due to the demand for tourism and cultural products or the need to export local culture, the design and artistic innovation of Yangjiabu kites in Weifang, Shandong Province is a proposition that local designers are concerned about. Good art products can not only enhance local economic income and local popularity but also promote local culture and strengthen identity. According to the research, most of the local products are designed based on traditional kites, trying to show the original charm of traditional art. At present, most of the kite cultural and creative products in Yangjiabu are faithful to the original appearance of traditional kites in terms of design and production, and their color schemes and shapes strictly follow the ancient kite-making techniques and cultural traditions. This undoubtedly preserves the original flavor of kite culture to a certain extent, which is of great significance to the inheritance and promotion of local characteristics. For example, the following works are some of the more common kite-related artistic designs in Yangjiabu, Weifang.

Figure 34 Kite Tourism Souvenirs (Miniature Swallow Kites) Sold in Yangjiabu

Figure 35 Kite tourism souvenirs sold in Yangjiabu (miniature butterfly kites, dragon head centipede kites)

Figure 36 Yangjiabu Kite Cultural Tourism Derivatives Sold on the Internet

Figure 37Weifang International Kite Museum sells kite cultural and creative products

The design of the above handicrafts is inspired by the traditional kites of Yangjiabu in Weifang, Shandong Province, and the main form of expression is the scaled-down Yangjiabu kites. The most representative types of Yangjiabu's kites - swallow kites, goldfish kites, butterfly kites, and centipede kites - are mainly chosen as the objects of design. These three kinds of kites play an important role in the kite culture of Yangjiabu, and each of them has a unique symbolic meaning. This set of works shows that Yangjiabu kites are small and exquisite with their unique shapes as well as bright colors. Based on retaining the shapes and colors of the traditional kites, by reducing the scale, these kites become even smaller and more exquisite, which is easy to collect and display. Although the above handicrafts have certain ornamental value as well as use value, however, under the background of the increasingly prosperous cultural and creative market and diversified consumer demands, some problems and deficiencies are also exposed. Because in today's society, consumers' aesthetic and consumption needs are becoming more and more diversified and personalized, and they not only value the appearance of the products but also the cultural connotation as well as the uniqueness and creativity of the products. The existing kite cultural and creative products in Yangjiabu, although doing better in appearance (style, color) inheritance, in meeting the diversified and personalized needs of consumers is not enough. The design of the products lacks novelty, the degree of cultural integration is insufficient, and the depth of excavation of the local culture is insufficient, making it difficult to attract the attention of young consumers. Therefore, if Yangjiabu Kite's cultural and creative products want to stand out in the fierce market competition, it is necessary to constantly explore and try new design concepts and market positioning based on maintaining traditional cultural characteristics, increasing innovation, and improving the design level and cultural integration of products. It is possible to develop more creative and personalized kite cultural and creative products by digging deep into the local cultural value as well as the local wisdom, and the organic combination of modern art, technology, popular culture, and other elements, to satisfy the aesthetic and practical needs of different consumers, and to make the kite culture of Yangjiabu glow more brilliantly in the new era.

5.3 Design Concepts and Ideas

Weifang Yangjiabu kites are the products of human beings' initial efforts to transform nature for their use. Differences in geography and natural ecology make kite culture present a strong regional color, it is a cultural carrier and aesthetic symbol inherited by local people for thousands of years, which can reflect the social customs and aesthetic style of the past, and can provide valuable reference information for modern decorative art designers. Kites are traditional, and we can't give up the glittering points of traditional skills in any case. But kites are even more modern, which must adapt to the modern aesthetic trend and aesthetic orientation, and must have active innovative consciousness and bold innovative behavior. Therefore,

modern kite art is by no means a mere copy of traditional kites, there must be innovation and development in the inheritance of traditional kites, and gradually form its artistic style through innovative thinking and practice. This is the spiritual impetus and intellectual support for all arts to be inherited and continuously promoted.

From the perspective of intangible cultural heritage, the development of traditional culture needs creativity, but the process of creativity is the process of creation, not a simple copy of traditional culture or rough artistic processing, but creative talents in the framework of aesthetics theory, relying on their wisdom and inspiration, with the help of all the available means of traditional cultural resources again processing and creation, and once again the process of elevation and upgrading. The part of the cultural industry that creates huge value is precisely reflected in the part of the finished results of creativity. Reviewing the history and current situation of the development of the kite industry in Yangjiabu, Weifang from the perspective of cultural ecological position, practicing the principles of "adapting to local conditions" and "applying art according to materials", conducting in-depth investigation and research, reinforcing the intellectual support of theories, and popularizing the folk art and culture is the key to the sustainable development of the modern folk art and culture industry. It is an important foundation for the sustainable development of the modern folk art and culture industry.

Previously, the field investigation practice of kites was mainly based on the quantitative analysis of the collected objects, the advantage of this investigation is that the data obtained is objective and accurate, which helps scholars to carry out scientific research, and the disadvantage is that it is difficult to grasp the humanistic connotation and artistic style of kites, and the in-depth situational and experiential attitude of the research is beneficial to the ecological protection of kites to grasp the full picture of the protection work. Directly turning one's design into a figurative folk art and cultural work, only by integrating into the cultural ecological environment of Weifang Yangjiabu kites, one can have a more profound comprehension and statement of its intrinsic cultural characteristics, meanings, and values, so that the obtained fieldwork materials and investigation reports can be used as favorable supporting evidence of the characteristics and values of kites as well as the dynamic development and change, which is of It is of great significance to the inheritance, development and innovation of folk art culture.

5.3.1 Physical Space and Cultural Ecology

Different natural geography will constitute different ecological environments and create different types of cultures. Weifang City, Shandong Province, China, is located in the western part of the Shandong Peninsula, in the north temperate monsoon zone, with the backland facing the sea, at the edge of the "JiaoLai Plain", with a peninsular climate and a natural wind tunnel. The daily change of wind speed is basically from

8:00 a.m. to increase, 14:00 a.m. to reach the peak, 16:00 a.m. to start weakening, the peak value of 4-5 meters \ second. The wind direction is relatively single, the transient fluctuation is small, and the low-altitude atmospheric circulation is smooth, forming a good kite flying site. Weifang kite fabrics to paper and silk materials, Weifang Linqu County since ancient times produced Linqu mulberry paper[80], sericulture, and silk industry developed, at the same time, due to the Yangjiabu neighboring Weifang River, Weifang River on both sides of the fertile land, water supply is sufficient, both sides of the river is full of waxed strips and cotton acacia strips[81], for the strip weaving tying provides a convenient condition for fetching materials, the strip weaving tying industry in ancient Weifang is developed, and later gradually In ancient times, Weifang had a well-developed strip weaving industry, and then gradually began to develop bamboo weaving, which laid a material foundation for kite weaving. According to historical records, the first kite in Chinese history was developed by Mozi and Lu Ban during the Spring and Autumn Period and the Warring States Period. Both Mozi and Luban were from the state of Lu in the Eastern Zhou Dynasty and lived in the Lushan Mountain Range of Weifang City. In addition with the development of the commodity economy, kites gradually became the subject of literati and painters in all generations. Therefore, the physical space as well as the cultural ecology of Yangjiabu in Weifang is the basis for the formation of the kite culture chain.

5.3.2 Local Wisdom and Cultural Value Base of Folk Art

Weifang Yangjiabu kite entered the folk since the folk life, folk beliefs, folk aesthetic and consciousness, and moral feelings intermingled closely together, with the function of avoiding evil and good luck, spiritual edification, is a kind of "letting go of bad luck" folk customs. Weifang kite artists said that in the past, kite-flying was called "letting go", "letting go of bad luck", which is a figure of "good luck", and the kites were flown high and far away in the Qingming Festival, and then the kite lines were cut to let the kites float away with the wind, meaning that the kites were put into the hands of the people. Then the kite strings are cut and the kite floats away with the wind, meaning that the "bad luck" accumulated in the year can be released to eliminate disasters and take refuge in the year. Meanwhile, Weifang Yangjiabu is one of the three major production areas of Chinese New Year paintings, and the production of traditional Weifang Yangjiabu kites is closely related to woodblock prints. Yangjiabu kites absorb the composition and coloring characteristics of woodblock prints, and from the Qing Dynasty onwards, folk artists even mounted and glued ready-made New Year's paintings on kites directly according to the kite's contour, achieving the effect of "hanging on the wall is a New Year's painting, and

[80] Linqu mulberry paper, also known as "Shandong old paper", is known as "life paper for a thousand years". It is made of local spring water as raw material, the paper is natural milky white, flexible texture, long and thin fibers, tensile strength, abrasion resistance, resistance to folding, non-toxic, tasteless, anti-corrosion and moth-proof, good water-absorbent properties, ink does not fade, known as "South Xuanbei Pi" said.

[81] A common local plant that grew along the river in the olden days.

putting it in the sky is a kite", forming distinctive artistic characteristics and traditional cultural values (Zhang, 2015).

In addition, Yangjiabu kite-making technology and process in Weifang does not have a fixed and strict knowledge specification, and the technology is accumulated through time and experience. First design the kite style, according to the scale drawing of the production drawings, and then tie the skeleton, the villagers summarize the experience in tying the kite and make up a song to pass it on. Weifang Yangjiabu kites' kite makers use primitive imagery as the accumulation, which makes the kite composition and pattern creation characterized by "improvisation", "simplicity" and "randomness", and conveys the folk culture and aesthetic interest. They convey folk culture and aesthetic interests. Although they do not understand physics, it is the words used by the kite craftsmen, such as "by feeling", "by experience", and "by eye and hand to measure", that reflect the local wisdom. Therefore, the interaction between New Year's paintings and local wisdom is an important link in the formation of the cultural value chain. According to the research, the existing products often show exquisite patterns and rich color combinations, ignoring the most essential and primitive attributes of kites, such as the symbolism of "seeking good luck and avoiding bad luck", the aesthetics of primitive imagery, and the connection with other folklore, such as New Year's paintings, etc., which have been neglected by the people, are the most important local elements of the kites of Yangjiabu, Weifang. These cultural elements, which are gradually neglected by people, are the important local wisdom and cultural values of Weifang Yangjiabu kites.

At the same time, the search and inheritance of cultural memory should be emphasized, and the design work is not only a material existence, but also a spiritual and emotional embodiment (Huang, 2020). An excellent design work should have a high degree of integration of material and spirit, not only practical and aesthetic, but also able to convey a profound cultural connotation and emotional experience, designers need to continue to explore and innovate in the process of creation, to realize the perfect integration of material and spirit of the design work. Designers should respect and excavate the origin and connotation of folk culture, and at the same time combine modern design concepts and technologies to realize the organic integration of tradition and modernity. For example, in the design, the production methods and techniques of folk crafts can be borrowed, combined with modern technology to inherit and carry forward the kite-making techniques, further excavate and practice the cultural memory and aesthetic needs of Yangjiabu kites, and create works with both folk flavor and modern sense.

When choosing design materials, attention should be paid to the typical elements and symbols in folk cultural memory, such as traditional patterns, colors, and shapes. At the same time, the selection of materials should also consider their cultural background and historical origin to ensure that the materials of the design works are

representative and credible. Yangjiabu kites in Weifang have strong local characteristics because of historical and cultural reasons, so it is necessary to understand the history of research and development as well as the background, excavate the cultural symbols and symbols, collect and organize the kite-making techniques and cultural background information, and conduct in-depth research on the history of kites, production techniques and cultural connotations of Yangjiabu kites. The history, production techniques, and cultural connotations of Yangjiabu kites should be collected and organized in-depth, including relevant text, pictures, videos, and physical materials. The cultural memory of Yangjiabu kites can be fully understood through interviewing kite-making inheritors, collecting kite works, and checking historical documents. The signs and symbols of design works are the embodiment of their cultural connotation and spiritual significance. A good design work should have unique signs and symbols that can convey specific cultural concepts and values. to present a unique folk art style. Therefore, designers should dig deep into the connotations and characteristics of folk cultural memories, and extract the themes and elements related to the design works from them. The theme of the design work is the embodiment of its cultural connotation, and culture is the soul of the design work. Good design work should have a distinctive theme and unique cultural connotation, reflecting the specific historical background, cultural tradition, and values. When designers incorporate these cultural elements, they should pay attention to conveying the emotion and mood of the work to be expressed, creating a spatial atmosphere with folk customs and a humanistic atmosphere, so that people can feel the flavor and emotional expression of traditional culture in it. The function of the design work is the embodiment of its materiality, while the emotion is the embodiment of its spirituality. Good design work should have a perfect function and a good emotional experience so that users feel comfortable, happy, and satisfied in the process of using it.

To highlight the cultural memory also need to extract the screening of cultural symbols and condense them into graphic symbols for application, the graphics in the design work and the packaged products are closely related, and not only play a complementary, auxiliary role but also more effective to strengthen the cultural characteristics. Therefore, designers often have to choose the right angle from semantics, semiotics, etc., and use appropriate graphics to convey their ideas, to achieve the purpose of conveying information and giving people more common feelings. As a kind of visualization language that exists independently in a specific culture, graphics can directly and accurately convey information to consumers, and play an irreplaceable role in the process of information exchange, in the communication between people, and in the output of culture. The symbolic image of graphic design represents the visual image of the work, which combines the empiricist character of photographs with the abstract logical character of diagrams, and is a bridge between our ever-changing world of language and the natural, material realm

of visual experience. Designers use symbolic images specific to visual language to apply them to their designs in a way that creates a spiritual-emotional resonance between the consumer and the design work. Culturally formed symbols and graphic language can not only highlight the cultural heritage of a place but also increase the clarity of recognition, wholeness, and artistry. Simple and intuitive graphic language, combined with international trends and design dynamics, exaggerated combinations of symbols, abstract applications of symbols, and superimposition with text symbols, can show the content and attributes of cultural memory in a concise artistic form. Instead of simply intercepting and splicing traditional patterns and shapes, designers should create meaningful, novel, and unique forms according to the meaning of the content of the graphic to express the graphic information artistically. Selecting graphic symbols that represent the local cultural image and accurately convey the spirit of the city for design is the only way to reflect the essence of culture.

In addition, we should pay attention to the choice of symbolism, symbolism is a lyrical expression, through the comparison of the image to express the abstract meaning of good luck. Beautiful moral connotation is the core element of Weifang Yangjiabu kite kites and other folk arts, therefore, when applying traditional culture in the design, we need to pay attention to the balance between the traditional characteristics of culture and different cultures and refine the most representative of the local auspicious moral elements for re-creation. By digging deep into the connotation and characteristics of folk culture elements, combined with modern design concepts and technical means, designers can create unique works to inherit and promote the national cultural memory. At the same time, it should pay attention to the excavation of the traditional skills of Yangjiabu kites, that is, the inheritance of the traditional way of making things. With the development of the economy and the acceleration of the industrial civilization process, people in the economic profits and the achievements of industrial civilization, at the same time, also carried out some predatory, destructive economic activities, in the first few years, people pay too much attention to the economic growth, the government control is not effective, to the GDP, the concept of "first growth and then governance" on these phenomena In the past few years, people focused too much on economic growth, and government control was not effective. However, in recent years, people have realized from one natural disaster after another that nature's revenge is coming, so we have started to call for the road of green design and eco-design. For design, this is not only reflected in our final physical product design but also throughout the design thinking process. In this context, the traditional way of making things embodies a unique value. In ancient China, the philosophical consciousness put forward by Confucianism has a budding foundation of ecological philosophy, which is of great significance in guiding the design principles of our contemporary design field. Confucianism discusses the relationship between "heaven" and "man" to harmonize the relationship between various aspects of design elements, for example, "the unity of heaven and man" is one of the basic

ways of thinking of the Chinese people (Wu, 2004), and "the unity of heaven and man" is one of the basic ways of thinking of the Chinese people (Wu, 2005). For example, "the unity of heaven and man " is one of the basic ways of thinking of the Chinese (Wu, 2019, p. 63). In modern design, this idea guides us to correctly recognize the relationship between "human being-design work-environment", breaking through the limitations of exploring the relationship between human beings and design in the past.

In addition, from the historical development of the whole world, China's humanities are mainly represented by Confucianism represented by Confucius and Mencius, and Taoism represented by Laozhuang. For more than 2,000 years, Taoism has been used as a supplement to Confucianism, which is the dominant ideology, to help the people of China form a Chinese style of world outlook, outlook on life, and values. Even in the field of aesthetics, Taoist doctrine is more forward-looking and practical than Confucianism. As Li Zehou wrote in The Course of Beauty, "The complementarity of Confucianism and Taoism has been a basic thread of Chinese thought for more than two thousand years." Design is "the science of man-made things". Arthur Poulos, former president of the International Society of Industrial Design, said, "Design is an imaginative and magical development activity that fulfills both the physical and psychological needs of people. Design is not a tool used by individuals to express themselves, nor is the goal of design to maintain the status quo, but to find ways to change to make it better." Although Lao Tzu emphasized: "Heaven and earth are in harmony to bring down manna, and there is no one who can make them equal", and Zhuang Tzu emphasized: "Although people have it, they have nothing to use it for", it seems that the concept of "doing nothing to rule" is not the same as the definition of modern design, and it is not the same as the definition of modern design. It seems to promote the concept of "doing nothing to rule", which is completely incompatible with the creativity shown in the definition of modern design, but this concept of "doing nothing" is exactly the source of theoretical support for modern design to return to the truth and daily aesthetics. Although the concept of nature in Taoist philosophy does not advocate the subjective initiative of human beings, it coincides with Confucianism's cognition of the trinity of "human being-designed product-environment" that influences modern design, which is a combination of human beings, design products, and the environment. It coincides with the Confucianism that influences the modern design "human - design product - environment" trinity cognition, unifying human, heaven, and earth in the level of "Tao". Taoism emphasizes the beauty of nature, simplicity, and the beauty of the every day, which is very close to our current grasp of aesthetic simplicity and the beauty of nature (Yao, 2023, p. 199).

There is an ancient Chinese book called "Kao Gong Ji"82, which is part of the "Zhou Li"83, completed in the Warring States period, is a record of the manual standard and manufacturing process of the official handicraft industry, which is regarded as a classic by craftsmen of the later generations, and embodies the philosophical thought of creation. From the point of view of our present-day design, "Kao Gong Ji" is a comprehensive summary of the experience of creation, including the idea of creation, production experience, skills, materials, processes, etc. It mentions several important ideas of creation, including "Heaven has time," "Earth has qi," and "Material has beauty. In it, several important ideas of creation are mentioned, including "Heaven has time", "Earth has gas", "material has beauty", "work has the skill" and "work has the skill". In it, several important ideas of creation are mentioned, including "Heaven has its times," "Earth has its energy," "Material has its beauty," and "Work has its cleverness," which can play an important role in the design of folk art as well as in the research of innovation. "Heaven sometimes" refers to the change of the season and the time of the heavenly way, which is the objective factor in the creation of things. The book of "Kao Gong Ji" says: "Heaven sometimes gives birth and sometimes kills. Grass and trees are sometimes born and sometimes die. Stone sometimes to Yu, water sometimes to condense, sometimes to zephyr, this day time also." Grasses and trees live and die, and water can be frozen or flowing, all of which are factors of heaven's timing. Ancient people began to establish a rational and effective understanding of the natural world, only a correct understanding of nature, adapt to nature, to make a good design, which is the "unity of man and nature" thought in the creation of the figurative reflection. Zhouli - Kaogongji - man" has the cloud: "wheel for the wheel, chopping three materials must be in its time. Three materials are available, the skillful and the. Hub is also, that is, to facilitate the turn. Spokes also, for the straight finger. The teeth are also thought to be solidly embraced. ..... Where the way to chop the hub, must be its yin and yang. Yang also, fine and firm; Yin also, sparse and soft." Qing Dynasty Dai Zhen note said: "material in the sun, then in the winter chopped. In the Yin, then in the summer chopped." Ancient man-made wheels, hubs, spokes, and teeth of the three parts of the raw material selection must be by the season. Sunny wood, dense and strong, must be cut in winter; to the shade of the wood, loose and soft, must be cut in summer. Ancient people already recognized the importance of material selection when they were making things, including the parts of raw materials and the seasons of feeling, which are the cognition accumulated by people's experiences over a long period. The

[82] The Kaogongji (Records of the Workers of the Crafts), which is derived from the Zhou Li, is a document that describes the specifications and manufacturing processes of the various types of official handicrafts during the Spring and Autumn Period and the Warring States Period in China. This work describes the design specification and manufacturing process of various types of crafts in Qi, and the book retains a large amount of pre-Qin craft production technology, arts and crafts information, and records a series of production management and construction system, which to a certain extent reflects the ideological concepts of that time.

[83] The Rites of Zhou is a Confucian classic, one of the thirteen scriptures, written by Zhou Gongdan, a statesman, thinker, writer, and militarist of the Western Zhou Dynasty. The Rites of Zhou records the socio-political, economic, cultural, customary, and legal systems of the pre-Qin Dynasty, which is rich in historical information and covers a wide range of topics, and it can be regarded as a treasure trove of China's cultural history.

selection and production of Weifang Yangjiabu kites are the products of recognizing nature, conforming to nature, and exploring nature.

"The earth has qi" refers to the objective factors in the creation of things, such as conforming to the earth's qi and adapting to the local conditions. Yanzi Chunqiu - miscellaneous under the tenth" has a cloud: "orange born in Huainan is orange born in Huibei is Hovenia", indicating that the ancients in agricultural cultivation have recognized the limitations of geographical conditions. The Zhouli-Kaogongji Preface says: "Zheng's knife, Song's catty, Lu's chipper, Wu and Yue's sword, move to its place and can't be good, the earth's gas is also." Zheng's domestic knives, Song's domestic axes, Lu's domestic curved knives, and Wu and Yue's swords, excellent quality, but if the production elsewhere, can not make such a good thing, this is the reason for the earth's qi. It shows that the earth's qi not only affects agricultural cultivation but also influences the production and manufacturing of handicrafts. For example, the development of traditional Chinese architectural styles has seen a huge difference in style between the north and the south. Due to the arid and cold winter in the north, windy and little rain, the traditional houses in the north generally have a small space pattern, warmth, full light, large south windows, and small north windows, saving energy consumption for heating in winter; in the south of Jiangsu and Zhejiang area, the climate is pleasant, with many water systems, the traditional houses are generally larger than the northern scale pattern, like the natural decorations, generally have a large courtyard with patio; and to the south, the climate is more humid, the temperature is high and humidity is high, and there are many venomous insects, the Yu The traditional architectural form of hanging footstools has appeared in the southeast and Qiandongnan area. Weifang Yangjiabu kite generation and development and the local natural ecology and human ecology are inseparable, in the performance of grounding, we look at today's design level of "grounding", precisely proving that this paper puts forward the "localization" of design, the current design Development, we need to understand the "ground has gas", protection and inheritance of local culture, respect for the regional and local nature of the nation, design culture can be revitalized.

"There is beauty in materials" refers to the element of material selection in the creation of things, which is the subjective factor in the creation of things. The selection of materials in the Kao Gong Ji has two meanings. On the one hand, to make good products, we must use superior materials; in other words, the quality of materials determines the quality of products, and if we want to make the products present a sense of high quality, we must not be sloppy in materials. On the other hand, we should be good at specific analysis of specific problems, according to the different nature of the material to choose the material, rather than just choosing expensive materials. For example, the natural simplicity of cotton and linen, wood and bamboo, the elegance of the wood, the opulence of gold and silver, the crystal clarity of jade, different materials have innate material properties. Kao Gong Ji" for the material of

the discussion is very consistent with our current design, design works of material and texture is the direct embodiment of its materiality, and texture is an important means of conveying emotion, on the one hand, do not because of the cost savings and subtractions in the material, which is very much more than the performance of the loss of material streamlining is very easy to lose the sense of the quality of the product, and the result is that the price is down in the eyes of consumers, the quality is also down. The result is that the price comes down, and the quality in the eyes of consumers also declines. On the other hand, as in ancient times, according to the design goal, choosing the right material, the development of design can not be separated from the development of the material, choosing to use the appropriate production materials, and highlighting the natural beauty of the material itself is also an important part of the design. A good design work should choose the right material and texture, not only reflect its sense of value and quality, and attach a higher cultural value but also give users a pleasant sense of touch and visual experience. The term "skillful work" refers to the element of skill and the subjective factor in the creation of objects. Reasonable use of design techniques to highlight the beauty of folk art craftsmanship is also one of the methods of folk art development, so we have to pay attention to the choice of materials and the use of technology in the design, which are an important part of the cultural heritage.

5.3.3 Development Management of the Cultural Value Chain of Kites in Yangjiabu, Weifang, Shandong, China

In the early days, Weifang Yangjiabu kites were mainly used for witchcraft and entertainment, which was the primary stage of the development of the cultural value chain of Weifang Yangjiabu kites. After a long period of development, in the Song Dynasty, kite-making became an independent profession, and in the Qing Dynasty, Weifang kites became an important livelihood for residents, and the transformation from folk custom to commercialization had been completed at this time. According to the historical records and the recollections of the old people in Yangjiabu, family inheritance was the main form of kite inheritance in Yangjiabu in the early days, and kite-making started in the family after the Spring Festival every year. This kind of family inheritance determines the mode of cultural inheritance, the cultural capital of inheritance is greater than the technical capital, the industry, technology, experience status, and honor of fathers and mothers can be passed on to the next generation in the family, which provides Weifang Yangjiabu kites a relatively stable mode of technical and cultural inheritance. The main scope of kite cultural value chain management in this period was carried out within the family, and family members were the main managers. In the spring of 1933, the county government of Weifang County of the Republic of China at that time decided to hold a kite competition every two years from then on, and then the first Weifang County Kite Competition was opened in the hall of the county government office. At this time, the center of gravity of the kite's

cultural value chain management gradually began to shift from within the family to the village and the county government. The second Weixian Kite Tournament was held in the playground of Nanguan in the county city during the Ching Ming Festival in 1935, and the third Weixian Kite Tournament was held on the beach of Bailang River in the center of the county city during the Ching Ming Festival in 1937. After 1937, Japan invaded Weixian in a big way, Weixian County fell in 1938, and Weixian's kite tournaments were discontinued. It was not until the founding of the People's Republic of China in 1949 that the Weifang kite as the symbol of Weifang City got the chance to continue to develop. However, after the founding of the new China, the economic development was unstable and there were ups and downs during the period, and it was only after the reform and opening up in 1978 that the Weifang kites were revitalized again. From 1984, the municipal government gradually replaced the county government to carry out festivals and cultural activities related to kites, and Weifang City successfully held the International Kite Festival consecutively; in 1986, a kite factory was built in West Yangjiabu, marking the decline of the family inheritance, and the mechanized large-scale production made the Yangjiabu kites go to a bigger market, which provided the conditions for the further development and improvement of the kite cultural value chain. However, mechanized production is fast and efficient, but often rough and of poor quality, while the low cost makes it difficult for handmade kites to survive. In 1988, Weifang was selected as the "World Kite Capital" by the domestic and foreign kite industry, and in 1989, approved by the State Council, the "International Wind Federation" was established in Weifang, and at this time, Weifang Yangjiabu kites began to go global. 2004 was the first year that Yangjiabu kites were introduced to the world. In 2004, the Weifang International Kite Festival was listed as a UNESCO Folk Art Organization Cultural Heritage and Folk Protection Project, and in 2006, Weifang kite-making techniques were listed in the first batch of national intangible cultural heritages with the approval of the State Council (Wang, 2023, p.244-249).

Today, the exchange and integration of Yangjiabu kites with foreign cultures are more and more frequent in Weifang, Shandong Province, gradually completing the transformation of the cultural value chain from folk art to the international kite festival, which greatly promotes the innovation and development of Yangjiabu kites in Weifang, as well as the opening up of the local community and the development of the economy. At the same time, the local government departments have formulated the policy of "kites lead the way, culture takes the stage, economy sings the opera", which drives the common development of other folk arts around the area, such as woodblock prints, face painting, paper-cutting and so on. As the main agglomeration of the kite industry in Weifang, Yangjiabu Village has developed from a single kite production and processing to a whole industry chain model integrating all kinds of kite parts processing, sales, and distribution, easing employment pressure and

increasing income, while boosting the development of urban tourism industry, forming a good economic cycle chain as well as a cultural value chain (Zhang, 2016).

5.3.4 Opportunities and Challenges in Managing the Cultural Value Chain of Yangjiabu Kites in Weifang, Shandong, China

Through research and analysis, the research team found that the natural ecology, cultural environment, audience, function, and material of Yangjiabu kites are in constant change. The kites' administrators have also developed from within the family to the village and county government, to the municipal government and the state, and now it has become an important international festival, precisely because the kites are in a constant state of change and therefore face different opportunities and challenges. Although the progress of modern manufacturing has increased production efficiency and reduced production costs, mechanization has led to a decline in the viability of traditional handmade products, as well as the neglect of the local ecological environment and cultural background. At the same time, due to changes in functions, purposes, audiences, managers, and market demands, kites need to maintain traditional cultural symbols and craft skills, and at the same time, need to obtain more opportunities for cultural exchange, innovation, and diversification brought about by the collision of local and foreign cultures. In addition, with the development, the function of Yangjiabu kites has changed from communication tools and exploration tools to witchcraft and blessing activities, entertainment and fitness programs, and today's cultural tourism and creative products, kites have been given new meanings and at the same time are facing the risk of losing their social functions and folk culture connotations. However, the products of Yangjiabu Kite Design Workshop in Weifang, Shandong Province are modern and exquisite, rich in colors, but fail to reflect the long cultural history and development history and fail to echo the local culture, with low added value. They also fail to connect with local folk life customs, historical background, and cultural ecology, and cannot arouse people's emotional resonance (Zhang, 2015).

In addition due to the change in cultural value chain management, the identity of managers and demanders as well as their needs have changed, thus requiring continuous product development and innovation to adapt to the new environment and identity. With the advancement of globalization and the diversification of cultures, the exchange and integration of folk art and foreign cultures has become an inevitable trend. Cultural exchange is an important way to promote the integration and innovation of folk art and foreign culture. By organizing various cultural activities, such as art exhibitions, cultural festivals, art competitions, etc., folk arts and foreign cultures can come into contact with each other, exchange and understand each other, broaden their horizons, and enhance their knowledge and understanding of different cultures. Promoting artistic integration is an important means of integrating and

innovating folk art with foreign cultures. New art forms can be created by learning from the art forms and expressions of foreign cultures and combining them with folk art. Cross-border cooperation is an effective way to realize the integration and innovation of folk art and foreign culture (Huang, 2020). Talents from different fields need to be encouraged to cooperate in researching and creating artworks with multicultural characteristics. For example, artists can be invited to collaborate with talents in other fields such as designers and architects to create innovative art projects. Theoretical research is an important support for promoting the integration and innovation of folk art and foreign culture. It is necessary to strengthen research efforts in related fields, and thoroughly explore the intrinsic connection, development law, and innovation direction of folk art and foreign culture. Further strengthen the integration of culture, and further promote the contemporary expression of traditional folk art and cultural innovation. Through academic exchanges and seminars, we will promote research results and provide theoretical support for the integration and innovation of folk art and foreign culture. In addition, international exchanges are an important platform for promoting the integration and innovation of folk art and foreign culture. It is necessary to strengthen exchanges and cooperation with folk art groups all over the world and co-organize all kinds of international cultural activities, such as international art festivals and cultural weeks. Through international exchanges, we can enhance the understanding and awareness of different cultures, improve the international influence of folk art, promote the diversified development of global culture, further promote the exchange and integration of folk art and foreign culture, and contribute to the diversified development of global culture.

5.4 Sketching and Discussion Screening

5.4.1 Generation of Design Sketches

5.4.1.1 Conceptualization of design sketches

I communicated with the workshop manager and the craftsmen during the initial sketching stage of the design and learned a lot of historical knowledge, technical skills, and years of production experience related to traditional kites, and I got a lot of precious text and picture data, which laid a good foundation for the design conception and design. The craftsmen provided a lot of advice and help during the sketching process, and I received guidance and help from Mr. Yang, a non-hereditary person. It helped me to show my ideas and conception better in the sketching stage and to be able to sketch and conceptualize based on practical kite-making techniques, which were implemented in the following steps.

First of all, according to the results of the previous research, we will organize the data and design ideas and design. The natural geographic environment has an important influence on the creation of kite artworks, Weifang is located in the middle

of the Shandong Peninsula, has a vast plain, and suitable climatic conditions, especially in the spring of the wind resources are abundant, providing a unique natural environment for kite flying, the geographic environment provides natural conditions for kite flying, and the geographic environment makes Weifang become an important place of origin for the kite art, and gives birth to a unique kite culture. This geographical environment makes Weifang an important birthplace of kite art and gives birth to a unique kite culture. Secondly, the natural geographical environment also influences the design and production of kites. In the process of kite making, the choice of materials is crucial. Light and flexible materials such as mulberry paper and bamboo are preferred for making kites, and the choice of these materials is closely related to local natural resources and climate conditions. In addition, kite artists in Weifang draw their inspiration from the natural environment and skillfully apply the colors of nature to the creation of kites, making the colors bright and eye-catching. Meanwhile, the kites in Yangjiabu, Weifang, have been a kind of props for praying for blessings since ancient times, so they often use colors and patterns that have auspicious meanings. The use of these colors and patterns not only makes the kites more beautiful but also reflects the local people's love and reverence for nature.

As a traditional Chinese folk art form, the creation and evolution of kites are deeply influenced by social life. From Qingming Festival customs, farming seasons, and people's living habits, to the rich folk culture, all these factors have shaped kites as a folk art to different degrees. Farming culture is an important part of traditional Chinese culture, and the farming season also has a profound influence on the creation of kite art. In the spring, when planting seeds, farmers would fly kites to pray for a good harvest. Qingming Festival is a traditional Chinese festival, and kite flying is one of the important customs on this day. On this day, people fly kites to commemorate their ancestors and to let go of "bad luck", and also to pray for good weather and a good harvest in the new year. Therefore, the Qingming Festival not only provides a platform for kite art creation but also injects deep cultural connotations into it. Artists use ancestral totems or auspicious motifs when creating and painting kites to express their nostalgia for their ancestors and their hope for a better life. Folk culture is an extremely rich part of Chinese traditional culture, and its influence on kite art creation should not be ignored. For example, Yangjiabu woodblock prints and kite art echo each other, and people combine local folk culture in their creations, which makes Yangjiabu kite-making techniques and kite styles unique and provides constant inspiration for kite art creations. People's living habits also influence the creation of kite art subtly, and through the development of different dynasties, kites satisfy the material and spiritual needs of people in different periods. Social life has had a profound influence on the creation of kite artworks. From the commemoration of the Qingming Festival and letting go of "bad luck", to the blessing of farming culture, to people's entertainment habits, as well as colorful folk culture, all these factors have shaped the diversity and uniqueness of the kite art, and the

Yangjiabu kites are not only the decoration in the air but also the vivid carriers of the traditional Chinese culture and folk customs, which are the source of ideas for artistic creation as well as the source of the ideas for artistic creation. These are the sources of ideas for artistic creation and the path of cultural connotation inheritance.

With sustained economic development and political stability, people's demand for culture and entertainment is growing, and kites, as a form of traditional culture and art, have received more attention and love. Economic and political development has driven the development of related cultural industries, including the improvement of kite-making materials and the expansion of the kite art market. This demand has driven the prosperity of kite artworks creation, not only the number of works has increased, but also the production skills and artistic level have been significantly improved. Along with the economic and political development, the government's support for culture and art is also increasing. This includes not only financial support and policy concessions but also the protection and inheritance of intangible cultural heritage such as kite art. These measures provide kite artists with a better creative environment and conditions.

At the same time, economic and political stability and development have also promoted social and cultural prosperity and progress, providing a broader stage and more audiences for kite art creations. Kite artworks can not only be exhibited and completed at home but also have the opportunity to go out of the country and have cultural exchanges with audiences all over the world. With the increase of cultural exchanges at home and abroad, kite artworks have absorbed the elements and concepts of modern art design while maintaining traditional cultural characteristics, making the works more contemporary. Therefore, it is necessary to pay more attention to the addition of visual aesthetic elements of the new era and the integration of cultural exchanges in the design and production of the works.

The influence of festivals, the Weifang International Kite Festival, and cultural tourism development on the creation of kite artworks is far-reaching and multi-faceted. Weifang International Kite Festival provides an international stage for kite art, which makes Weifang kites and their artistic value recognized and understood by more people. Through the publicity and promotion of the festival, the market demand for kite artwork is enhanced, which further promotes the creation and development of kite art. As an international kite festival, Weifang International Kite Festival attracts kite lovers and artists from all over the world. This promotes the exchange and collision of kite art in different cultural backgrounds and inspires the creative inspiration of artists.

Weifang International Kite Festival is not only an event of kite art, but also a cultural exchange. During the festival, various cultural activities and forums were held to enrich the cultural connotation of kite art, making it not only a way of entertainment but also a cultural symbol and spiritual symbol. With the rapid

development of the cultural tourism industry, more and more tourists are interested in traditional culture and art. As an important part of Chinese traditional culture, kites and their artworks have a broad sales space in the tourism market. The development of the culture and tourism industry drives the sales and promotion of kite artworks and provides kite artists with more economic sources and creative power. Under the background of the integration of culture and tourism, kite artworks are not only sold as tourist souvenirs but also become an important cultural display element of tourist attractions. Combining kite artworks with tourist attractions, can enhance the cultural experience of tourists and improve the cultural connotation and attractiveness of tourist attractions. The development of the cultural tourism industry makes more people begin to pay attention to and participate in the inheritance and protection of kite art. Through tourism activities, people can personally experience the charm of kite art, thus deepening their knowledge and understanding of this traditional culture. Meanwhile, the development of the culture and tourism industry also provides more financial and resource support for the inheritance of kite art, which helps its long-term sustainable development. Festivals such as the Weifang International Kite Festival and the development of cultural tourism have had a positive impact on the creation of kite artworks, which not only promotes the innovation and development of kite art but also enhances its international popularity and cultural connotation. At the same time, the development of the cultural tourism industry also provides strong support for the inheritance and protection of kite art.

With the changes in the natural environment, the development of social economy, the development of festivals and cultural tourism as well as the improvement of people's living standards, the consumers' demands for cultural products are constantly changing. Simple kites can no longer meet the diversified demands of modern consumers, so it is necessary to transform the traditional folk art of kites and develop more diversified products with more artistic value and practicality, such as decorations and cultural and tourism cultural and creative products, to meet the market demand. Transforming the traditional folk art of kites into decorations or cultural tourism and cultural creation products can further enhance its cultural value. These products are not only practical but also serve as a carrier for cultural dissemination, allowing more people to understand and appreciate the charm of kite art, thus promoting the inheritance and development of traditional culture. The transformed kite traditional folk art products have broader market prospects and higher added value, which can bring more business opportunities and economic benefits to related industries. At the same time, this transformation also helps to promote the integration and development of cultural industry and related industries, forming a more dynamic industrial chain. Transforming the traditional folk art of kites into decorations or cultural tourism and cultural and creative products is a kind of innovation in art form. This kind of innovation can not only give new vitality to traditional art but also attract more young people's attention and participation, thus

promoting the inheritance and innovative development of traditional culture. To summarize, now the traditional folk art of kites needs to be transformed into decorations as well as cultural tourism and cultural and creative products, which is an inevitable requirement to adapt to the market demand, enhance the cultural value, promote the development of industry and innovate the traditional art form. This transformation helps to promote the inheritance and development of kite art, and at the same time can bring more business opportunities and economic benefits for related industries.

To sum up, in the process of design, it is necessary to respect the natural ecology and the influence of social life on it, use original native materials as well as design principles such as color matching and compositional forms, study and excavate the origin and development of folk art and culture, including the original symbolism of kites, living customs, agricultural seasons, other folk cultures, native wisdom, memory technology, people's living habits, etc., and explore from different dimensions The key elements of cultural and artistic value can only be fully integrated into the local social life to obtain constant inspiration for the works, and at the same time satisfy people's material as well as spiritual needs. In addition, it is also necessary to pay full attention to the development trend of related cultural industries driven by economic and political development, including the improvement of kite-making materials and technology, cultural integration, the expansion of the art market, the growth of the demand for non-heritage culture, and the change of the aesthetic elements of the works in the new era, etc. Therefore, it is necessary to try to incorporate more local and new cultures into the kite artworks, and it is possible to try to explore the relationship between the kites of Weifang Yangjiabu and the kites of Yangjiabu. Weifang Yangjiabu kites can try to explore the integration of Weifang Yangjiabu woodblock prints, willow weaving, and other cultures, to further promote the strength of cultural exchanges and integration and exploration process.

According to the design concepts and principles, I plan to draw three sets of design sketches, corresponding to the search for cultural memory, the traditional way of making things, the fusion of cultures, and other design ideas. Conceptualization design is a form of art originating from life and close to nature, which carries rich cultural connotations and unique regional characteristics, and should be able to become a carrier of local cultural memory and inherit folk customs and culture. The design concept emphasizes respect for nature, return to the true nature, the pursuit of harmony and symbiosis between man and nature, natural forms as materials, focusing on the use of natural colors and materials, presenting a rustic, natural aesthetic, focusing on highlighting the natural beauty of natural materials, embodying the traditional concept of the unity of man and nature in the creation of things. The choice of patterns and themes should pay attention to auspiciousness and bad luck, reflecting the beliefs, values, and aesthetic interests of the local people, rooted in the specific regional culture and folklore, which can reflect the local culture and ecology, the

people's living customs, belief concepts, and aesthetic interests. In addition to exchange and integration with foreign cultures, the collision of new cultures, the exploration of cultural innovation. The work not only has unique artistic value, but also carries rich historical and cultural information while emphasizing the inheritance of history and culture, combining historical and traditional elements with modern design, and injecting deep cultural heritage into the work.

This research design project designs art design and decoration products related to Weifang Yangjiabu Kite Folk Art, which breaks through the traditional art design and decoration products, not only conveying the artistic characteristics of the kite art itself, such as the craftsmanship, color, and composition but also focusing on integrating the results of this research into the design works. Through studying the formation and development of the kite culture chain in Yangjiabu, Weifang, this study takes a new perspective to understand the relationship and correlation between folk art and culture and the local natural environment, history, economy, and other cultures, and looks at and carries out the design practice from a new perspective, focusing on the integration of the materials, inheritance groups and changes in functions, traditional handmade memories and cultural memories into the design, and at the same time, strengthens the integration of local and foreign cultures. The research team will focus on the integration of materials, changes in heritage groups and functions, traditional handmade memories, and cultural memories into design while strengthening the integration of local and foreign cultures. The research team designed ten sets of design sketches based on the findings of the research process.

5.4.1.2 Design sketching(part)

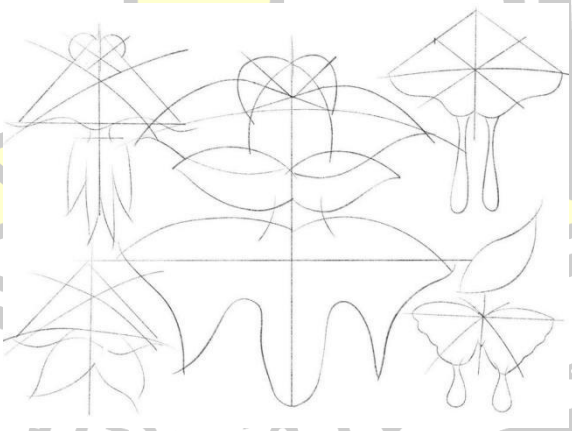

Figure 38 Design Sketch 1

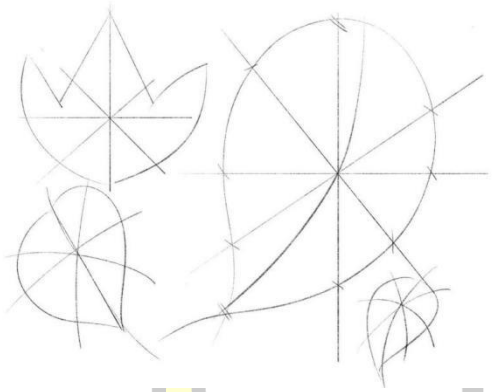

Figure 39 Design sketch 2
Source: Susu Zhang,2023.1.6, Design Drawing

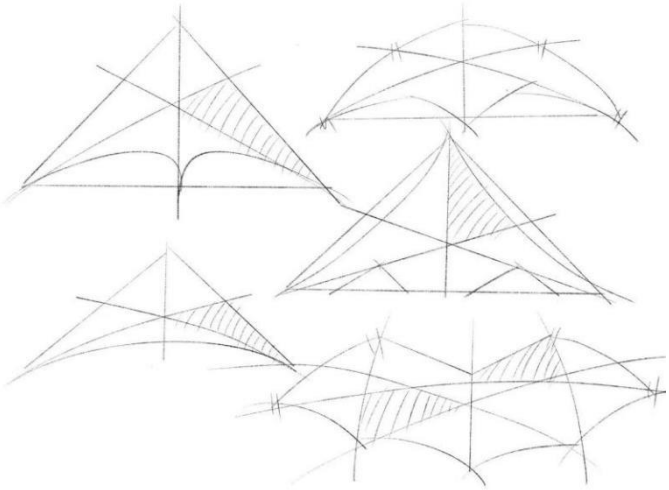

Figure 40 Design sketch 3

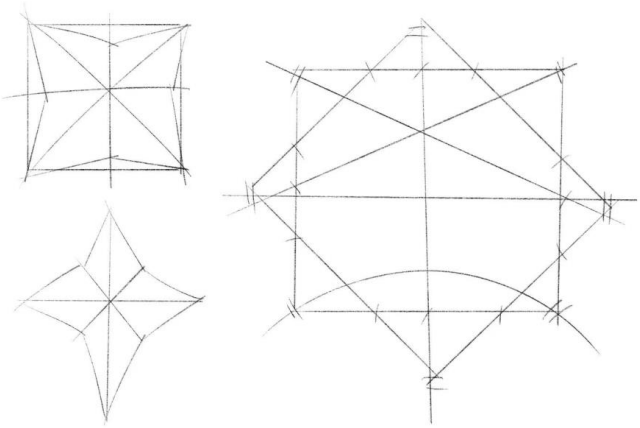

Figure 41 Design sketch 4

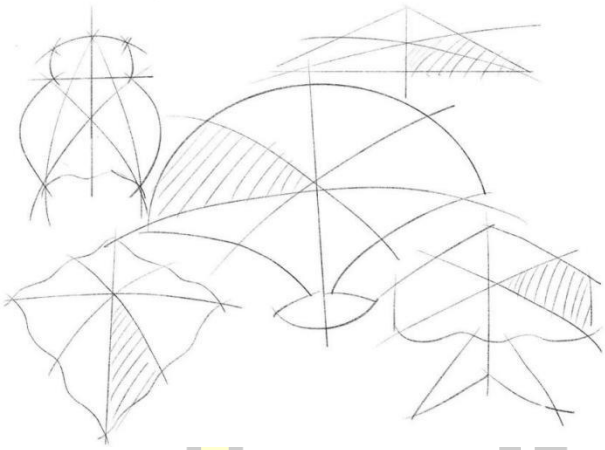

Figure 42 Design sketch 5
Source: Susu Zhang,2023.1.9, Design Drawing

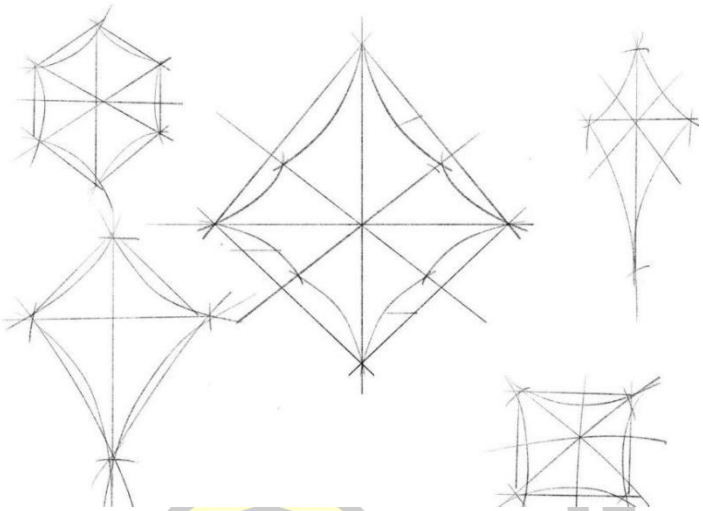

Figure 43 Design sketch 6
Source: Susu Zhang,2023.1.11, Design Drawing

พหูนํ ปณฺฑิโต ชีเว

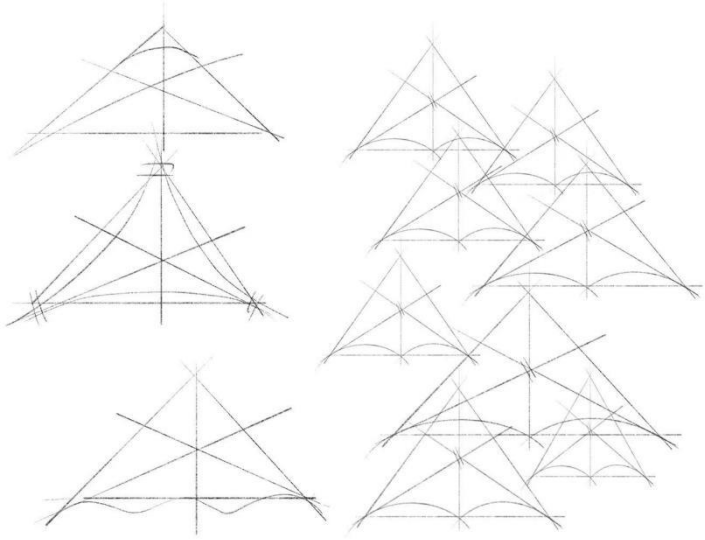

Figure 44Design sketch 7
Source: Susu Zhang,2023.1.14, Design Drawing

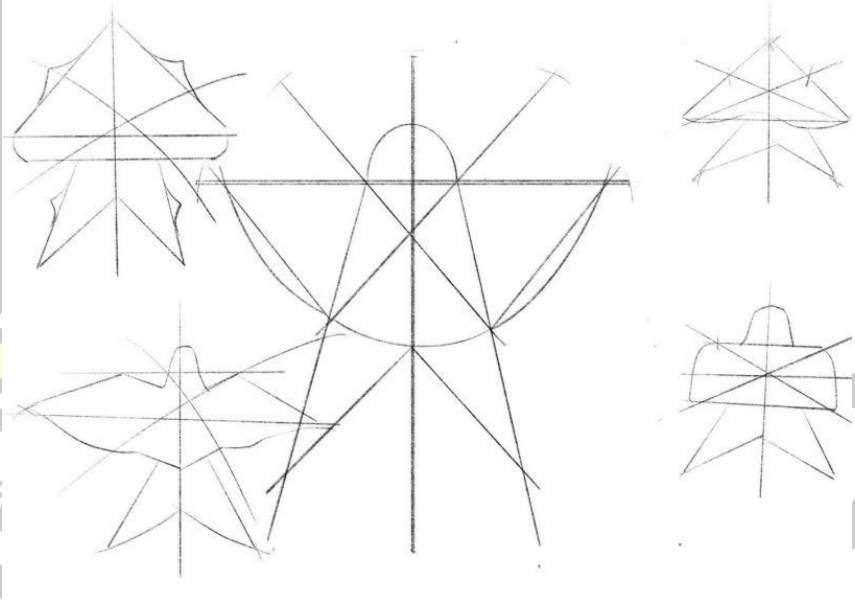

Figure 45 Design sketch 8
Source: Susu Zhang,2023.1.16, Design Drawing

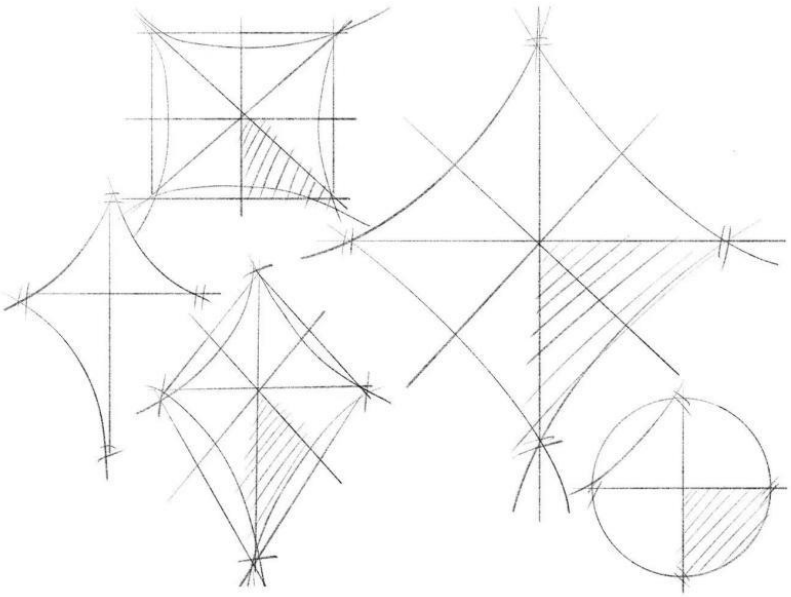

Figure 46 Design sketch 9
Source: Susu Zhang,2023.1.17, Design Drawing

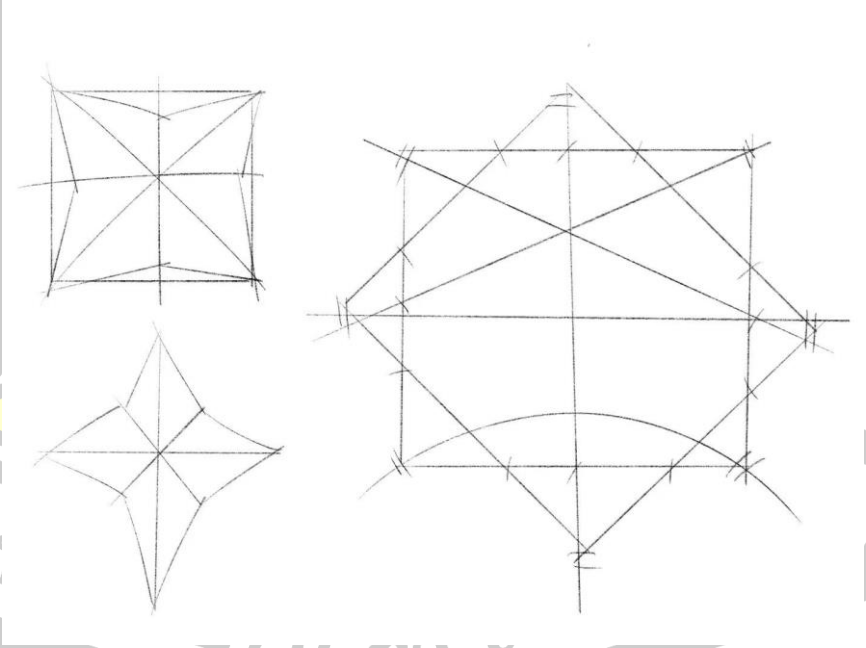

Figure 47 Design sketch 10
Source: Susu Zhang,2023.1.19, Design Drawing

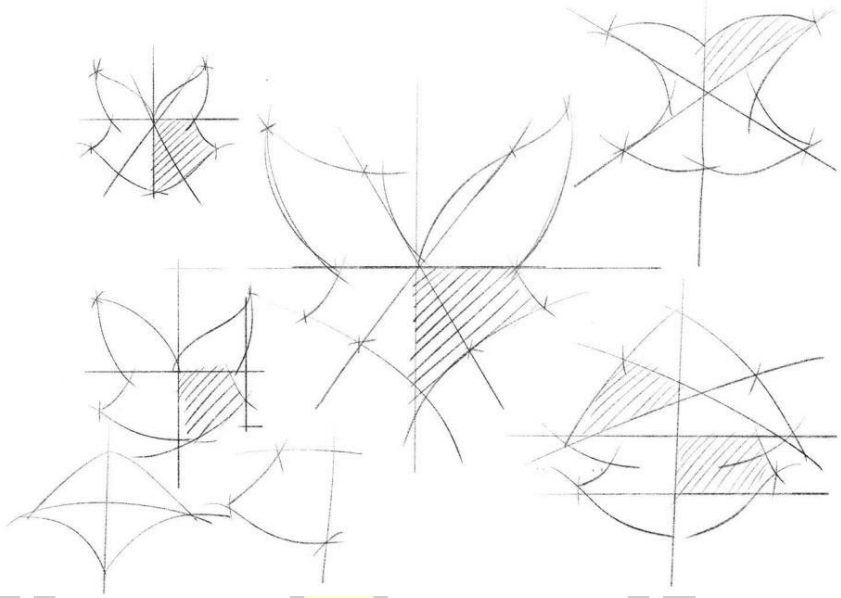

Figure 48 Design sketch 11
Source: Susu Zhang,2023.1.20, Design Drawing

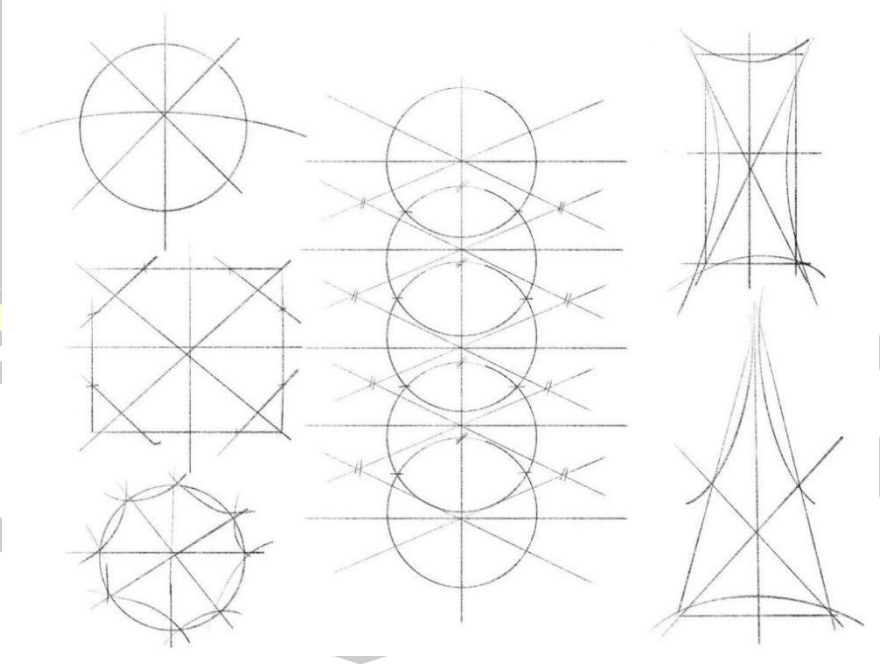

Figure 49 Design sketch 12
Source: Susu Zhang,2023.1.20, Design Drawing

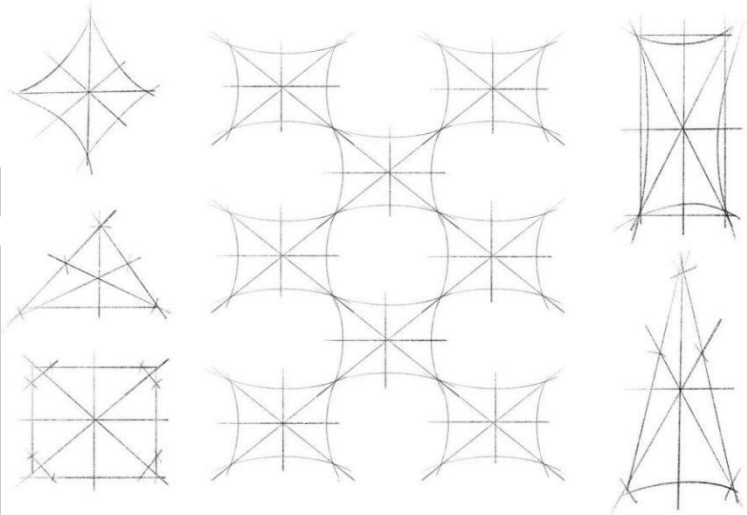

Figure 50 Design Sketch 13

5.4.2 Expert Discussions and Selection of Design Options

During the fieldwork in Yangjiabu, Weifang, Shandong Province, the author had the honor to meet several artists related to traditional kite making and inheritance, including old-generation kite makers, traditional kite non-hereditary people, kite workshop leaders, and workers, kite factory employees and kite sellers, who provided a lot of help and guidance to my research and design exploration practice. During the process of sketching, the team of experts and the kite workshop staff made timely suggestions for adjusting the sketches and emphasized the relationship between the inheritance of traditional craftsmanship and cultural integration and innovation in the process of sketching, as well as the strengthening of the inheritance and extension of traditional kite techniques, cultural memories, and folk culture connotations in the process of sketching. In the process of sketching, it is found to pay attention to the relationship between sketching and the implementability of physical production, to take into account the physical properties of raw materials related to kite making, and to find the relationship between respecting local wisdom and innovation. Actively investigating the local folk life customs, historical background, cultural ecology, and triggering emotional resonance. At the same time, the research team also consulted with the people in charge of the work closely related to commercial designers to discuss and improve the promotion and publicity appearance of the products, which will help to improve the practicality of the products and their competitiveness in the market.

Figure 51 Demonstrates the design sketching and selection process
Source: Susu Zhang,2023.1.10, Photography

After consulting with experts to select suitable sketches, consulting craftsmen to discuss and learn about key technical issues, experts to follow up on the design progress and suggest modifications, and the research team to summarize, discuss, and reflect regularly, three sets of sketches were finally selected from the ten sets of sketches. At the same time, to ensure the smooth development of the sketches into design works, in the process of designing constantly find problems and solve problems. For example, the research team coordinated and adjusted the contradictions between the design concept and the implementation of traditional craft techniques during the production process. In addition, the experts pointed out that the aesthetic and cultural characteristics of the materials and craftsmanship of the works were not significant. In addition, the team discussed and practiced with the experts and craftsmen how to innovate the products according to the changes of the heritage groups, functions, administrators, and demanders, to adapt to the new environment and identity. After the sketches were made, I worked with... and... We had exchanges and discussions to explore the feasibility of the design solutions as well as to screen them... It is believed that a successful design scheme must fully consider factors such as cultural connotation, visual effect, and realistic implementability. After the discussion, the experts reached a consensus and shortlisted three sets of better preliminary design proposals for backup, and finally completed the production of the

design works with the help and guidance of craftsmen and experts, as shown in the figure.

5.5 Innovative Design Practice Based on Kites in Yangjiabu, Weifang, Shandong, China

5.5.1 Exploring 'The View of Creation from 'Bundling': Rediscovering Local Design Language

5.5.1.1 Creative ideas and design drawings

Weifang Yangjiabu kites have a long history of development, carrying a profound cultural heritage and folk wisdom. However, in the context of globalization, the design world is increasingly showing a trend of convergence. However, this convergence often makes the design works lose their unique cultural flavor and regional characteristics. Therefore, after researching and organizing the data, we decided that the main idea in creating the kite works is to dig deeper into the original symbolism of kites, i.e., to remove bad luck and bring good fortune, to further strengthen the cultural attributes of kites, and to reflect the infinite yearning for flying of the people in ancient times. I hope to study the cultural ecology as well as the cultural value of kites for the re-creation of kite folk art, to transform the long history and culture, people's good wishes and yearning for the sky into visual enjoyment and spiritual communication, and to preserve and inherit the original intention of kites through this art form. Therefore, I decided on the theme of kites as "Honoring Gods and Spirits, Sending Meaning to Objects - A Simple and Uncomplicated Spiritual Carrier". This theme aims to express people's desire and pursuit of flying through the art form of kites and at the same time help to pass on the ancient and primitive traditional culture.

In this design work, I emphasize the original meaning and connotation of kites as folk culture. In ancient times, people in the Yangjiabu area of Weifang realized the meaning and function of praying for good luck and removing bad luck by flying kites with words or patterns written on them. Therefore, it can also be said that kites were firstly a kind of witchcraft behavior, people painted bad news and disasters on kites and flew them into the sky, at this time the kites were like a spell, and the culture of spells was an important part of the traditional Chinese culture of magic, which is permeated and integrated with many cultures such as Taoism, Yin-Yangism, Buddhism, etc., and carries a rich cultural connotation and practical significance. The philosophical thinking of the spell originates from the Taoist, Yin-Yang, and other schools of traditional Chinese culture. The symbols and shapes it adopts cover the philosophical meanings of the universe, nature, life, and other levels. For example, symbols such as the Five Elements, Bagua, and Zodiac, which are common in charms,

are the Taoist and Yin-Yang School's understanding and expression of the laws of the universe and nature. The history of sigils and incantations goes back a long way. Sigils and incantations are "symbols" in the form of divine power attached to prescribed "words" (or figures) and written on specific objects (e.g., paper, silk, wood, and bamboo) as the orders of the gods. The spread and influence of incantation culture are also very wide, not only occupying an important position in folk beliefs and religious ceremonies, but also penetrating many fields such as literature, art, folk art, etc., and is, therefore, the most primitive imagery embodiment of kites. At the same time, the talisman is also the spell of folk law religion, folk law school, and folk law vein, and talismans can reflect human's exploration and thinking about nature. From a cultural and historical point of view, the charming culture in which kites are used for praying for peace, eliminating disasters, and blessing people to achieve their goals is an important part of Chinese folk art culture, which is not only a kind of ceremonial activity handed down from generation to generation, but also embodies people's explorations and reflections on nature, the universe, life, and other issues. In addition, the artistic style of charms has a profound influence on traditional aesthetics, and the writing and drawing of charms often have a certain artistic and aesthetic value, reflecting people's pursuit of beauty and the creation of art. Therefore, in the innovative art of kite, while strengthening the strength of the expression form of incantation, the typical auspicious color scheme and primitive and simple expression form are used, to highlight the intention of removing the bad luck and the most primitive not only strengthen the cultural added value of the kite artworks, but also to pass on the cultural memories as well as to improve the visual effect and artistry of the works.

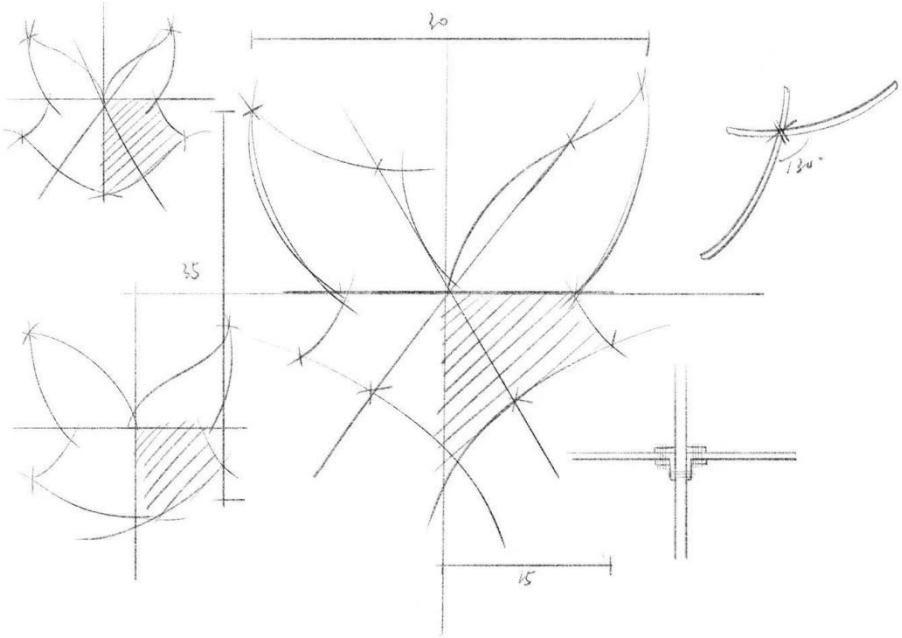

Figure 52 Hand-drawn Design 1

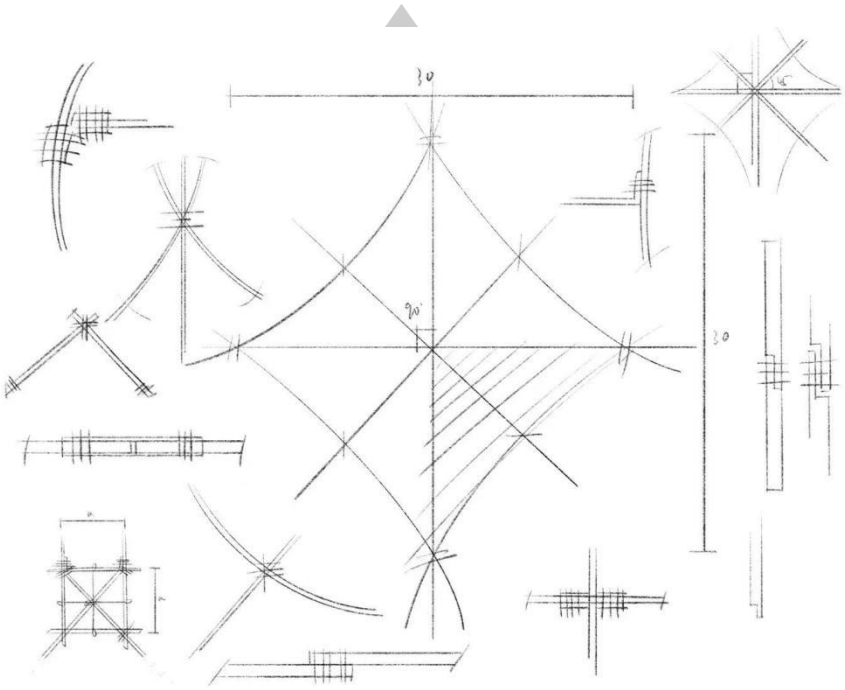

Figure 53 Hand-drawn design 2
Source: Susu Zhang,2023.2.3, Design Drawing

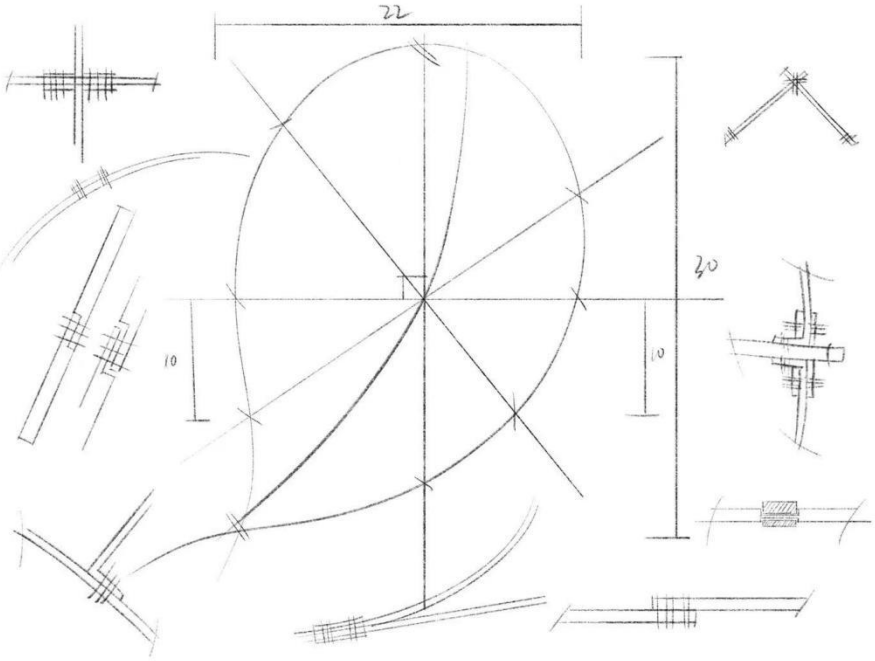

Figure 54 Hand-drawn design 3
Source: Susu Zhang,2023.2.3, Design Drawing

5.5.1.2 The creative process

The first step in making kites is to carefully select and prepare the materials. Yangjiabu kites usually use light and tough bamboo gabions as the skeleton, which not only ensure the lightness of the kite but also can resist a certain amount of wind. At the same time, soft texture and colorful silk or rice paper are chosen as the masking materials, which are not only beautiful but also have good air permeability, in line with the characteristics of kite flying. Designing patterns is a very crucial step in kite making. The pattern design of Yangjiabu kites not only inherits the traditional auspicious patterns but also incorporates modern aesthetic elements, forming a unique artistic style. The overall balance and symmetry of the kite, as well as the color matching and visual effect of the pattern, should be taken into consideration when designing the pattern.

First of all, it is necessary to prepare the materials needed for tying the kite skeleton, including bamboo strips, fine thread, scissors, pliers, latex, and so on. Bamboo strips should be made of tough, crack-free, and insect-free bamboo to ensure the strength and stability of the kite skeleton. Fine threads are used to tie the bamboo strips, and nylon or cotton threads that are abrasion-resistant and have strong tensile strength should be chosen.

You also need to prepare the materials needed to draw the kite, including kite paper, paints, brushes, and so on. Kite paper can be light and tough, such as rice paper or nylon cloth. Paint can be chosen according to the theme of the kite, and watercolor and Chinese painting paints can be used because they are brightly colored and easy to dry.

The skeleton is the supporting structure of the kite, and the making of the skeleton requires excellent carpentry skills. The craftsman cuts the bamboo splints into long thin strips and then ties the strips with thin threads to form the skeleton of the kite according to the designed pattern. Specifically, the bamboo strips are cut to the desired length and width, and then the edges of the strips are sandpapered with sandpaper or the back of a knife to prevent cuts to the hands or damage to the kite's fabric during the tying process. After cutting the bamboo strips, the bamboo strips are simmered into the required curvature using simmering and baking, at this time, attention should be paid to the symmetry of the kite skeleton production and sufficiently smooth and flat.

Figure 55 The process of making the design work 1
Source: Susu Zhang,2023.2.10, Photography

Because the main source of the design of this set of design works is based on the traditional bird-shaped kite in Yangjiabu, Weifang, Shandong Province, after discussing with the non-heritage people and craftsmen, it was decided that the skeleton of the kite should be made with the structure of "one head, two bellies, and one tail root". Firstly, the head and belly bamboo strips are tied together with thin threads to form the basic skeleton of the kite. Then, the upper bladder and lower bladder are tied together with the head and belly bamboo strips with fine lines to form the wings of the kite. During the tying process, it is important to note that the upper bladder strip should be slightly stiffer and the lower bladder strip should be slightly softer to ensure the stability of the kite during flight. At the same time, make sure the angle and distance between the bamboo strips are consistent to ensure the symmetry and balance of the kite. The requirements for the skeleton are very strict, to ensure the stability of the structure while keeping it light and flexible.

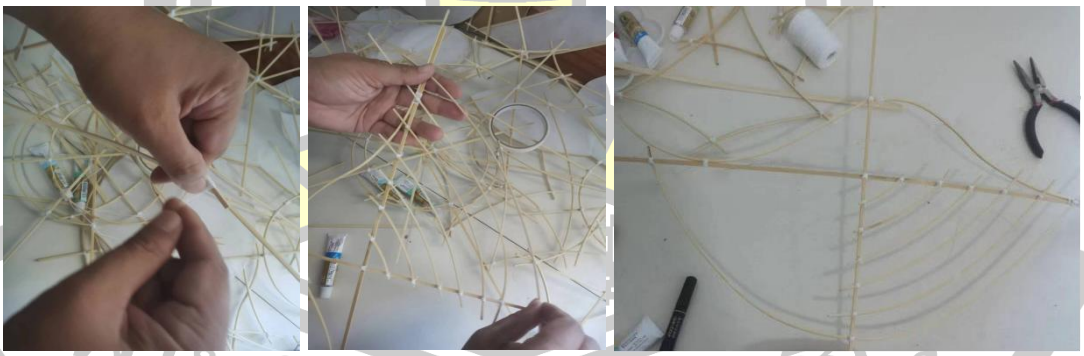

Figure 56 The process of making the design work 2
Source: Susu Zhang,2023.2.12, Photography

The upper end of the tail bar meets in the middle of the web bar. To ensure that the skeleton is square, you can simmer and bend the tail strip slightly where it meets the lower end of the belly strip. It is also necessary to move the upper end of the tail bamboo strip downward a little bit, which also ensures the squareness of the skeleton. The length, width, and shape of the tail strip, as well as the specific style, are then decided according to the visual effect of the piece and other factors involved.

During the tying process, the shape and angle of the skeleton need to be constantly checked and adjusted to ensure that it meets the design requirements. At the same time, attention should be paid to the tightness and uniformity of the lashing to prevent the kite from loosening or deforming during flight. Also, check and adjust the skeleton again after completion to ensure the kite's stable performance.

Figure 57 The process of making the design work 3

Source: Susu Zhang,2023.2.14, PhotographyMasking is the process of covering the selected rice paper over the skeleton and fixing it with fine thread or paste sticking. When masking, it is necessary to make sure that the fabric is flat and wrinkle-free, and at the same time pay attention to the close bond between the fabric and the skeleton. After the masking is completed, the craftsmen will draw or paste pre-designed patterns on the surface of the kite. Before painting the kite, the pattern needs to be designed first. After discussing with experts and trying to decide on the pattern and color matching of the kite according to the theme of this set of related works, this design departs from the more figurative kite pattern drawing mode which is common in the traditional Shandong Weifang Yangjiabu kites, and adopts modern patterns and symbols instead, to highlight the exploration of the traditional culture as well as the innovativeness and pay attention to the proportions and balance of the pattern when designing. The design mainly adopts traditional color matching and graphics and patterns that can highlight the design theme, using graphics and colors to strengthen the original symbolism of this set of design works of removing bad luck and driving away evil and good fortune, thus reflecting the most primitive charm culture and ritual attributes, which not only strengthens the added value of culture but also has a sense of art. Specifically, first use a pencil to gently outline the pattern on the kite paper, try to keep the technique stable to ensure the smoothness and accuracy of the lines, and

make the outline lines a little thicker to facilitate the subsequent color filling and finishing. Subsequently, according to the designed pattern, use brushes and paints to apply color. When applying color, pay attention to the even application of paint and color matching, starting with light colors and gradually transitioning to dark colors to increase the sense of hierarchy, at the same time, pay attention to avoid overflowing the contour lines, so as not to affect the overall effect. After the coloring is completed use a fine brush or outlining pen to retouch and outline the details. When retouching, pay attention to the gentle and meticulous approach to ensure that the details are delicate and accurate. After finishing the painting, carefully check the painting effect of the kite to see if there are any omissions or mistakes, and make timely corrections and additions, at the same time make sure that the pigments are dry and well adhered to avoid peeling or fading. After completing the above steps, the work is finished. However, the kite will be checked and adjusted after the completion of the production through expert proof and research. Debugging includes checking whether the skeleton of the kite is symmetrical and balanced, whether the connections are solid, whether the color matching and the drawing have reached the expected effect, and so on. At the same time, when problems are found, adjustments and corrections are made to the work promptly.

5.5.1.3 Demonstration effect and interpretation

Figure 58 Design Showcase 1
Source: Susu Zhang,2023.5.1, Photography

The theme of this kite artwork is "honoring the gods and spirits, sending intentions to things - a simple and simple spiritual carrier". The artwork is a recreation of kite folk art by studying the cultural ecology and cultural value of kites and preserving and inheriting the original intention of kites through this art form. Through

the colors and auspicious patterns that are characteristic of local folk art and culture, it conveys people's yearning and prayers for soaring in the sky and a better life. In terms of color, I used bright and contrasting colors, such as red, black, and gold, to reflect the tradition, auspiciousness, and originality of kites. These colors not only have a strong visual impact but also conform to the symbolism of auspiciousness and festivity in traditional Chinese culture.

Figure 59 Design Showcase 2
Source: Susu Zhang,2023.5.1, Photography

In the pattern design, I borrowed the traditional elements of Yangjiabu kites and combined them with the charm pattern to highlight the original meaning and cultural attributes of the kite, symbolizing that bad news and disasters are drawn on the kite and flown into the sky, and at this time the kite is like a charm, which is not only the most primitive imagery of the kite, so in the innovative art of the kite, we strengthened the strength of the charm's expression and at the same time, we used typical Auspicious color scheme and primitive and simple form of expression, thus highlighting the removal of bad luck and the most primitive intention can not only strengthen the cultural added value of the kite art works, but also add modern elements, such as abstract geometric shapes and simple lines, so that the kite maintains the traditional flavor, but also has a sense of modernity, so that the works have a certain artistic and aesthetic value, reflecting the pursuit of people's beauty and the pursuit of art. Creation. In the structural planning of the kite, I respectfully focus on the original function of the kite, including balance and stability. Through reasonable design, the kite design also fully considers the combination of practicality and aesthetics, making it not only an artwork but also a practical craft. It is hoped that this work can bring people visual enjoyment and at the same time help to pass on

local folk art and culture, stimulate people's cultural memory, and strengthen the sense of cultural identity while enhancing the love of life and the hope for the future.

5.5.2 The Creation and Practice of 'The View of Creation from 'Bundling': Reviving Local Design Language

5.5.2.1 Creative Ideas and Design Drawings

In the wave of globalization, the homogenization of design has become increasingly serious, and many traditional crafts and localized design languages are gradually forgotten. The traditional kite-making craft of Weifang Yangjiabu has a long history, among which the binding technique, as one of the core crafts of kite-making, not only carries rich historical and cultural connotations but also embodies the wisdom and craftsmanship of ancient people. However, in modern society, with the progress of science and technology and the change in people's lifestyle, the traditional kite-making techniques have been gradually lost, and the once localized folk culture language also faces the risk of being marginalized. To promote traditional culture and respect the local wisdom and unique ecological environment, I try to take "The View of Creation from "Tying" - The Return of Localized Design Language" as the theme of kite innovation design. By digging deep into the traditional kite-making techniques and localized design elements, I aim to create a kite product that has both modern aesthetic value and traditional cultural heritage. The design is mainly inspired by traditional Chinese kite-making techniques, especially the unique strapping technique. As a traditional handicraft technique, "binding" not only has practical functions but also carries deep cultural connotations. Weifang Yangjiabu traditional kites are made of natural materials such as paper, bamboo, cotton, etc. This design continues to use these traditional materials and emphasizes the traditional strapping technique of the kite skeleton. This design is expected to incorporate the traditional local wisdom into the design, reflecting the primitive and ancient way of production, and the balanced relationship between human beings and the natural ecological environment. In addition, this design has a unique artistic style and personality, as each piece is handmade by the artisan and cannot be exactly duplicated. Hand-bound design works often incorporate the emotions and efforts of the craftsmen and are the crystallization of the craftsmen's heartfelt creations. This emotional attachment makes the design work not only an object but also a spiritual symbol and emotional expression. Hand binding requires the craftsman to have superior skills and rich experience, and each step requires delicate operation and strict control. This exquisite craftsmanship makes the design work perfectly in detail, letting people feel the craftsman's heart and ingenuity. The fusion of traditional binding techniques with modern design concepts is the key to the innovative design works of this set of kites, through modern design concepts focusing on the balance of functionality, aesthetics, environmental protection culture, etc. In the process of fusion, the traditional binding techniques can be refined

and reconstructed by using the visual effects of modern design, to make it retain the traditional flavors and characteristics, but also meet modern aesthetics and practical needs. In addition, hand lashing is a traditional handicraft skill with a long history and deep cultural heritage. The value of this cultural heritage cannot be measured in money. This uniqueness gives the design works a high degree of recognition in the market, which can attract the attention of consumers and increase the market value and competitiveness of the works. At the same time, the handmade bundled design works also pay more attention to the use of natural, environmentally friendly materials, in line with the modern pursuit of green, healthy life.

In addition, this design work also has aesthetic value, which is mainly reflected in the following aspects. First of all, it can reflect the beauty of nature and harmony: the design works often use natural materials, such as cotton rope, bamboo strips, etc., which have a natural beauty in themselves. Through the skillful techniques of craftsmen, these materials are given a new life and form, and the works as a whole present a sense of beauty that harmonizes with the natural environment. Rhythm and Rhyme: In the process of hand binding, the craftsmen need to master a certain sense of rhythm and rhyme. This rhythm is not only reflected in the tightness and sparseness of the binding but also in the overall shape and composition of the work. This makes the design works visually have a dynamic beauty, which can arouse people's empathy and emotional response. With the unique flavor of handicraft: compared with modern mechanized production of products, hand-bundled design works have a unique flavor of handicraft. This flavor comes from the traces of craftsman's manual operation and personalized creation, which makes each piece of work unique, with high artistic value and collection value. Embodying creativity and imagination: Hand-bound design works are often the crystallization of craftsmen's creativity and imagination. Through different strapping techniques, material combinations, and color matching, craftsmen can create a rich variety of forms and patterns, showing endless creativity and beauty. Emotions and temperature: Handmade strapping designs are the fruit of the craftsmen's heartfelt creations, incorporating the craftsmen's emotions and heartfelt endeavors. This emotion and temperature make the design work not just a cold object, but a kind of artwork with temperature and emotion. When people appreciate and use these works, they can feel the heart and care of the craftsmen, thus generating emotional resonance and recognition.

To summarize, the value of handmade binding-based design works is reflected in the inheritance of skills, the embodiment of local wisdom, cultural heritage, nature and harmony, rhythm and rhyme, respect for the ecological environment, creativity and imagination, as well as emotion and temperature and other aspects. By combining them with modern design concepts to create kite products that are both aesthetically pleasing and distinctly localized. These values make the hand-tied design works have a unique charm, and these values make the hand-tied design works have high competitiveness and collection value in the market. In conclusion, this is a color

design concept for the return of localized design language to inherit and carry forward the traditional kite-making techniques, by combining the traditional strapping techniques with modern design concepts, this design language is not only a respect and inheritance of the traditional culture, but also a kind of innovation and attempt of modern design, which is worth exploring and practicing.

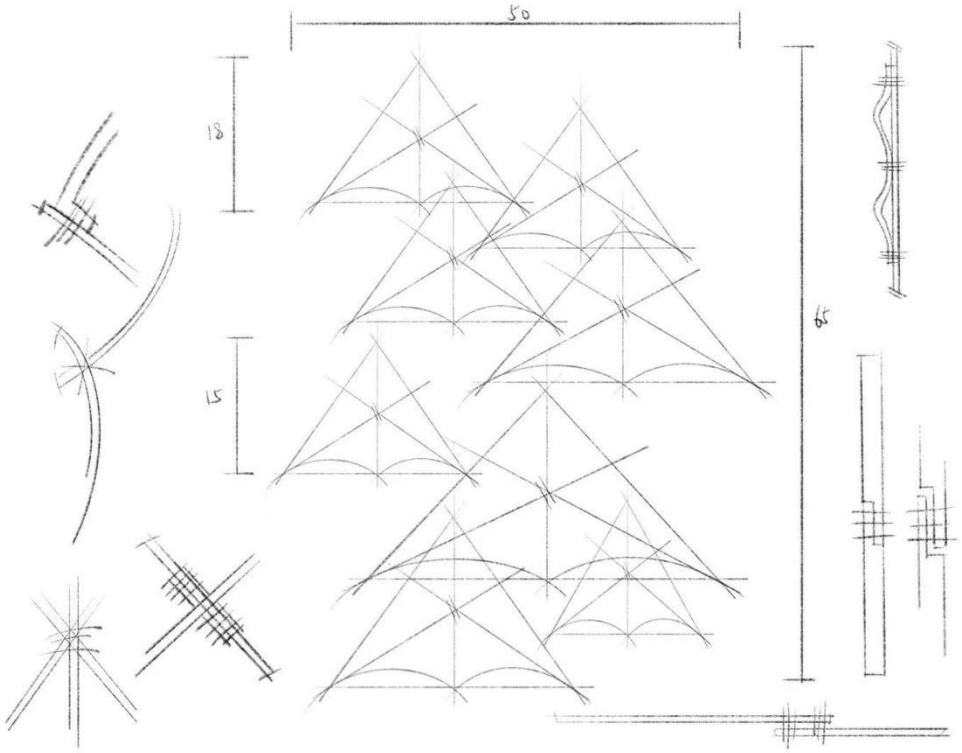

Figure 60 Hand-drawn design 4
Source: Susu Zhang,2023.2.5, Design Drawing

พหูนํ ปณฺฑิโต ชีเว

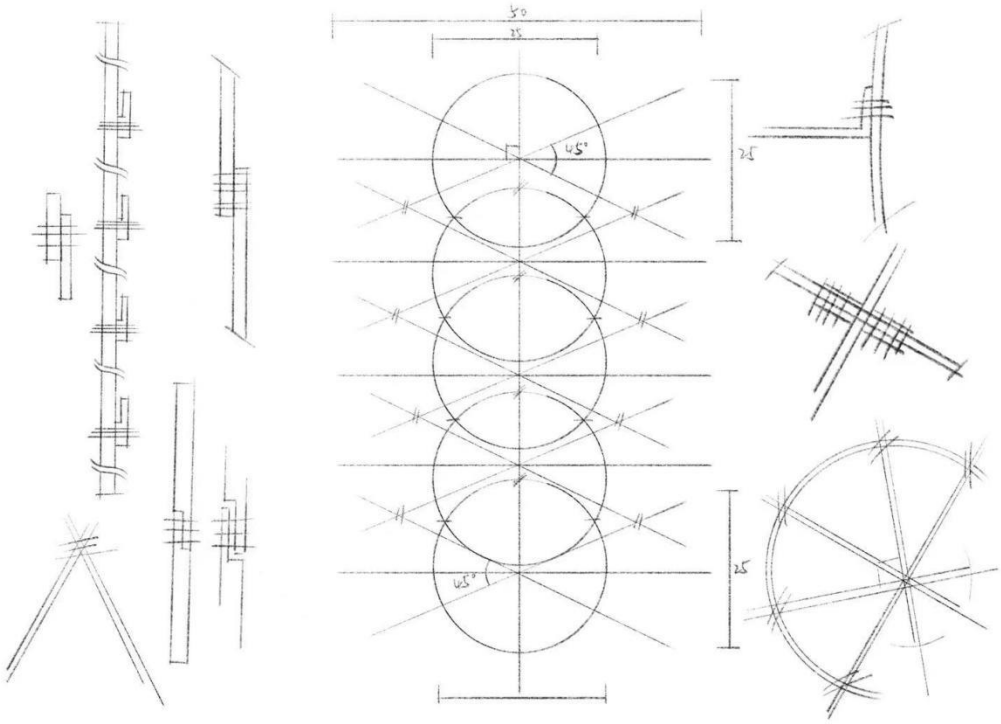

Figure 61 Hand-drawn design 5
Source: Susu Zhang,2023.2.5, Design Drawing

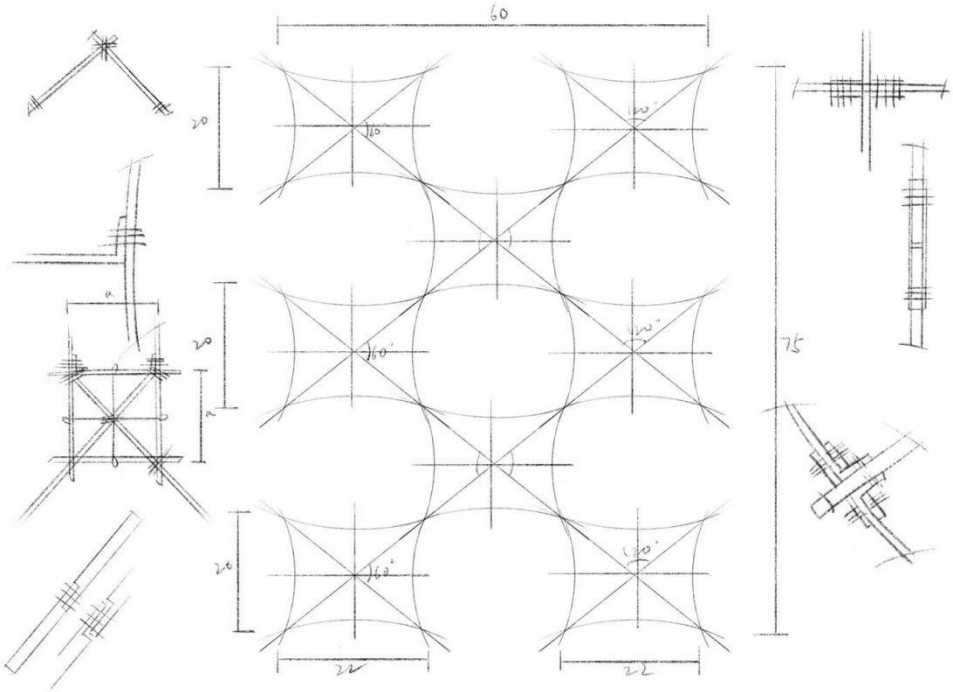

Figure 62 Hand-drawn design 6
Source: Susu Zhang,2023.2.6, Design Drawing

5.5.2.2 The creative process

Shandong Weifang Yangjiabu Kites, as one of the representatives of traditional Chinese kite art, production process is a comprehensive handicraft integrating carpentry, painting, calligraphy, and carving. Its production process not only reflects the craftsmen's exquisite skills but also inherits the profound folk culture and artistic wisdom. The design concept of this set of design works is to integrate the traditional local wisdom into the design by digging deep into the binding technique and localized design elements in the traditional kite-making process, reflecting the primitive and ancient production method and the balanced relationship between human beings and the natural ecological environment, the design element that needs to be emphasized in this whole set of design works is the bamboo binding technique of the kites in Yangjiabu, Weifang, Shandong Province so that it is necessary to make the binding technique of the kite a new and unique one. To bring back the strapping technique in the innovative design of kites, it is necessary to study and analyze the traditional strapping technique first. This includes understanding the historical origin, basic techniques, material selection, and its application in traditional kite making. A comprehensive understanding of the traditional strapping technique can provide strong support and a source of inspiration for the subsequent innovative design.

In traditional kite making, the strapping technique mainly uses natural materials such as bamboo cotton, etc. In this modern kite design, we respect and keep using the common materials used in traditional kite making, and the strapping technique, we also keep using the traditional strapping technique of Yangjiabu kites in Weifang, Shandong Province, but we have made innovative designs and exploration for the production of strapping and the combination of the skeleton in the wind so that the design work can keep the traditional strapping technique in the same way as that of the traditional kites. The skeleton binding of Weifang Yangjiabu kites is the key link in the production of kites, and its classification and techniques reflect the essence of traditional handicrafts.

First of all, in terms of skeleton material, the skeleton of Weifang kites is usually made of bamboo. This is because bamboo is light and tough, suitable for making the skeleton of kites. When selecting the material suitable for making the skeleton of kites, we choose elastic and intact bamboo as the main production material. Because it has the characteristics of light weight, straight and dense fiber, moderate strength, toughness, and elasticity. According to the introduction of the craftsmen, we pay extra attention to choosing bamboo material with fine texture, long knots, and good elasticity.

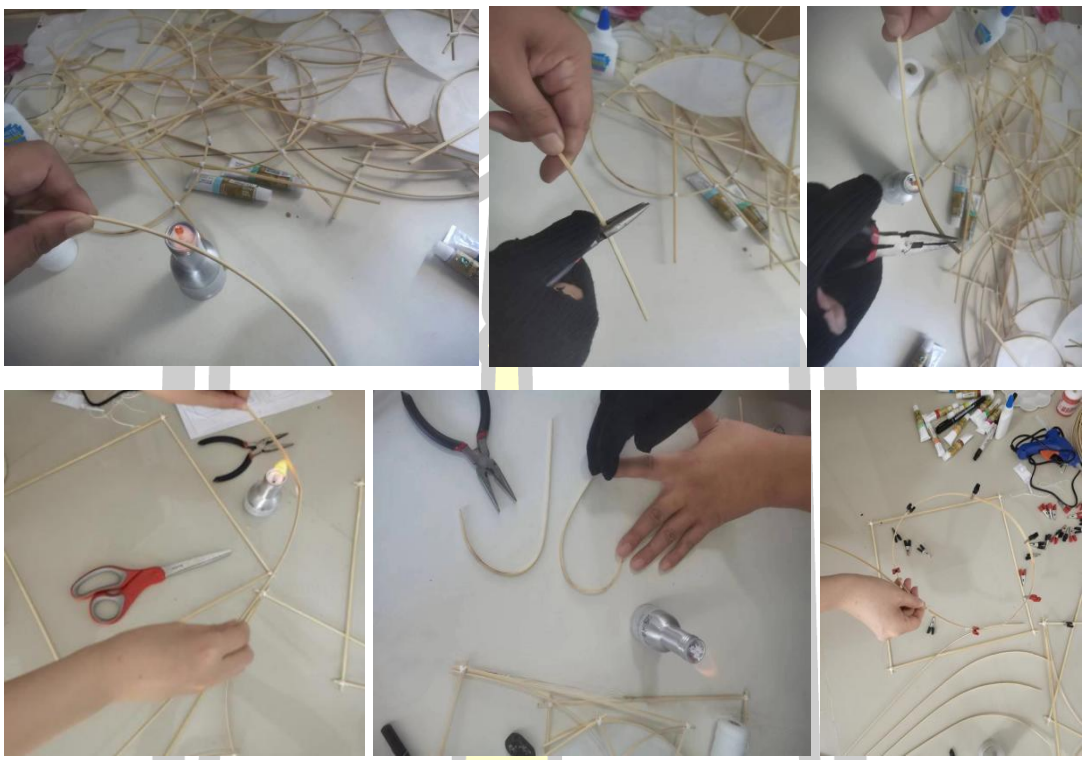

Figure 63 The process of making the design work 4
Source: Susu Zhang,2023.2.12, Photography

Secondly, when tying the skeleton, we refer to the Weifang kite skeleton tying technique, whose unique tying method makes the kite both firm and beautiful. Specifically, the binding of the kite skeleton can be divided into the following steps: selecting bamboo materials, breaking bamboo materials, cutting bamboo strips, repairing bamboo strips, bending bamboo strips, tying bamboo strips, etc. In this process, the craftsmen need to make the kite with a unique method, which makes the kite strong and beautiful at the same time. In this process, the craftsmen must master the proper strength and angle to ensure the firmness and stability of the skeleton. Before tying the kite skeleton, the bamboo strips need to be treated. This includes the steps of breaking the bamboo material, cutting the bamboo strips, and repairing the bamboo strips. When cutting bamboo strips, it is necessary to master the proper cutting method, so that the bamboo strips are smooth and free of thorns. At the same time, attention should also be paid to the bending and heating of bamboo strips to ensure that they meet the intended shape and strength requirements. When bending bamboo strips, it is necessary to master the fire and bending degree to avoid the bamboo strips from breaking or deforming (Wang & Zhao, 2021).

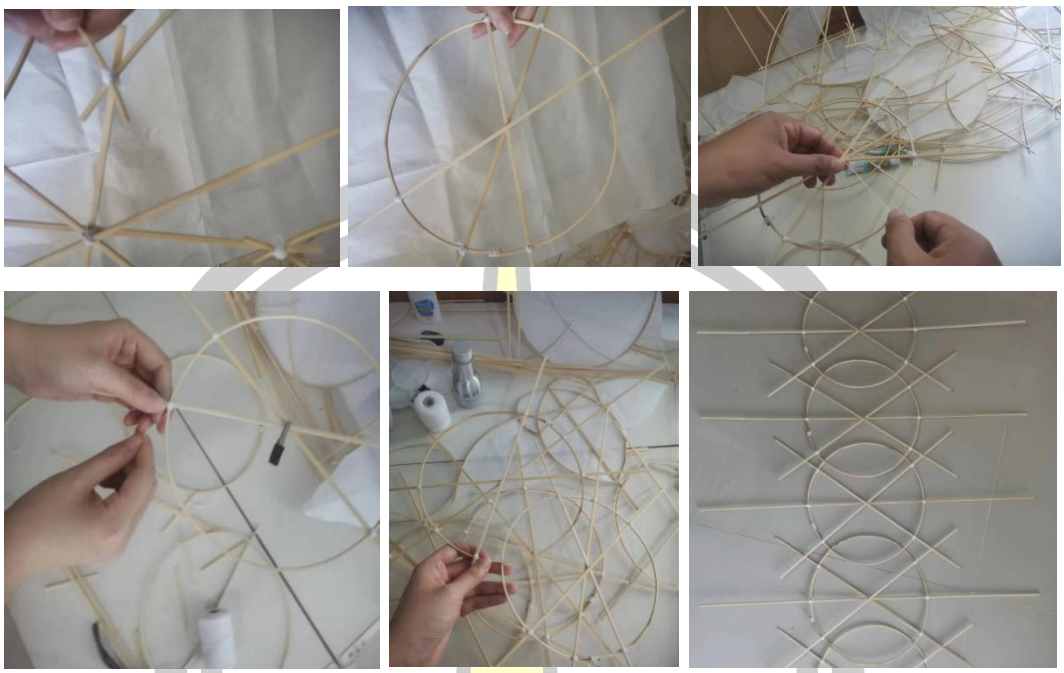

Figure 64 The process of making the design work 5
Source: Susu Zhang,2023.2.16, Photography

When tying the kite skeleton, it is important to know the proper tying methods and techniques. This includes choosing the right tying materials and mastering the strength and angle of tying. In addition, when tying the skeleton of the work, it is necessary to pay attention to some details, for example, when tying the bamboo strips, it is necessary to pay attention to the degree of sturdiness and aesthetics, and to pay special attention to symmetry and balance, and to make adjustments and corrections carefully and patiently. For example, when making the kite in the shape of a goldfish in this set of works, the thickness, weight, and soft and hard strengths of the left and right fin strips, the upper and lower fins strips, the hard fins, the duplex fins, and the soft fins must be symmetrically consistent, According to the craftsman's experience it needs to be measured and weighed to get the exact balance, which can ensure the stability and equilibrium of the kite. After the skeleton is completed, it still needs to be thoroughly checked and tested to make sure its quality and performance meet the requirements. Because this set contains three small works because the modeling characteristics of each small work are different, the matters to be paid attention to when tying the kite skeleton are also different. Specifically, this set of works contains the Uncompetent Row Seal. Because it is a hard-winged kite, the skeleton should be hard and strong, and the symmetry and balance of the skeleton should be paid extra attention to. The butterfly kite in this set of works belongs to soft kites, so the skeleton should be relatively soft when it is being tied up, to show the attributes and characteristics of the butterfly fluttering as required by the works, and extra attention should be paid to the flexibility and elasticity of the kite's skeleton in the production

of this work. The third work in this series belongs to the category of beat kite, which is a kind of flat kite with a relatively simple skeleton, but requires a more standardized and neat production. Therefore, when tying the skeletons of different types of kites, it is necessary to adopt different skills and techniques to highlight the unique charm of different types of works, and at the same time, this is also a way to give enough respect to the traditional kites of Yangjiabu in Weifang, Shandong Province and inherit the cultural elements. It is worth mentioning that some bamboo elements are kept exposed during the decoration process to emphasize the creative theme of fusion of tradition and modernity. These exposed bamboo elements form a sharp contrast and echo with other parts of the kite, making the whole work more harmonized and unified. In conclusion, when tying the skeleton of a kite, you need to focus on the selection of materials, symmetry and balance, bamboo strip handling, tying skills, and detailing. Only by mastering these key points and techniques can we produce kites of excellent quality.

In this set of works, after discussing and trying with relevant experts, we used plain rice paper for gluing, and almost no drawing and coloring treatment, to highlight the design theme of this set of works, and also to further and better reflect the charm of the traditional kite-making craft of lashing. After repeated attempts and exploration, we found that. It can be combined with the plane composition form in graphic design so that the kite skeleton can be separated from the original traditional kite shape, that is, the more figurative characteristics, and use the more abstract geometric shape to form a stronger sense of combination, such as repetition, gradient, etc., to be able to form a relatively more modern rhythmic sense of design works, which can more prominently show the compositional relationship between the cotton threads and bamboo, as well as the rhythmic relationship formed by intermingling with each other. and the beauty of rhythm and harmony formed by the intermingling of each other. We are constantly exploring and trying to find a compromise between maintaining the traditional cultural heritage of kites in Yangjiabu, Weifang, Shandong Province, and modernized design. The work not only maintains the cultural heritage and cultural genes of Shandong Weifang Yangjiabu traditional kites but also gives this set of works simple, abstract, and modern visual attributes, which can better satisfy modern people's aesthetic vision and practical needs.

พหูนํ ปณฺฑิโต ชีเว

5.5.2.3 Demonstration effect and interpretation

Figure 65 Design Showcase 3
Source: Susu Zhang,2023.5.20, Photography

The "Bundled" View of Creation - The Return of Localized Design Language" is a work based on the traditional roots of kite art in Yangjiabu, Weifang, and an attempt to integrate modern design concepts and innovations. This work aims to realize the harmony and unity of tradition and modernity through the traditional art form of kites, showing the art of handcraft, kite binding, local wisdom, a strong sense of composition, and ecological and natural balance of artistic characteristics. This work is entirely handmade, and every step from the selection of materials to the completion of the work is a collection of craftsmen's efforts and wisdom. Especially in the tying craft of the kite, we have followed the traditional tying techniques of Yangjiabu and made subtle innovative adjustments. Through the exquisite tying technique, the skeleton structure of the kite is more stable and the shape is more beautiful, which not only retains the flight characteristics of the traditional kite but also enhances its artistic ornamental properties.

Figure 66 Design Showcase 4
Source: Susu Zhang,2023.5.20, Photography

During the design process, we deeply explored the local cultural elements of the Weifang area and skillfully integrated them into the shape and pattern of the kite. These elements not only enrich the visual effect of the kite but also give it a deep cultural connotation. At the same time, we also drew on the creative wisdom of local folk artists to make the work closer to the current aesthetic needs of people and realize the return of localized design language. In the choice of production materials, we prioritized environmentally friendly and renewable natural materials to reduce the impact on the environment. At the same time, in the design of the kites, we also emphasized their harmonious integration with the natural environment. All the works use environmentally friendly and biodegradable materials to respond to the concept of sustainable development, making it more in line with the modern young generation's aesthetic of simplicity and modernization as well as the concept of sustainable development.

This work makes a bold and innovative attempt at compositional design. In terms of the specific shape and pattern design of the kite, we comprehensively utilize the techniques of twisting, wringing, folding, and folding in the traditional strapping technique to create a novel and interesting kite shape. Through the clever use of binding techniques, we can present colorful visual effects and unique cultural connotations on the kites. At the same time, through the skillful layout and combination, the various parts of the kite form a unified whole that is both independent and interrelated, and then combined with the traditional strapping techniques, it creates a more creative and expressive kite work. After discussing and trying with relevant experts, we gave up using colorful rice paper or dyeing, and used

plain rice paper for kite making, to highlight the design theme of this set of works, and also to further and better reflect the charm of the traditional kite-making craft of lashing. We are the integration and application of kite design and graphic design in plane composition, using design techniques, this strong sense of composition not only enhances the artistic expression of the kite but also makes it in the modern design context.

The "Bundled" View of Creation - The Return of Localized Design Language" is an in-depth exploration and innovative practice of kite art in Yangjiabu, Weifang. By highlighting the artistic characteristics of handcraft, kite binding, local wisdom, a strong sense of composition, and ecological and natural balance, we expect to promote the modern transformation of traditional kite art, by integrating traditional handcraft binding techniques into modern kite innovative design, we can create kite works with both traditional cultural heritage and modern aesthetic needs, which not only helps to pass on and promote traditional culture, but also provides an opportunity for the inheritance and development of traditional culture. carry forward the traditional culture, but also can bring new inspiration and innovation points for modern design, so that it can play a greater value and influence in the contemporary society and culture. Overall, through the production of this set of works, we further appreciate the exquisite skills and unique charm of traditional handicrafts, without the help of master craftsmen and vigorously assist us in completing the production of this set of works, these skills and techniques not only require long-term practice and accumulation of experience but also need to be more love for handicrafts and the pursuit of perseverance. Looking forward to the future, with the continuous progress of science and technology and the change of people's aesthetic demands, we expect more creative and expressive kite works to be born in the blend of tradition and modernity.

5.5.3 Creative Design and Practice of the Work "Fusion - Collision of Past and Present

5.5.3.1 Creative ideas and design drawings

Through the preliminary market research and user demand analysis, we found that the more common Weifang Yangjiabu traditional kite crafts and other art products on the market are insufficient in the form of traditional innovation, the cultural connotation is relatively thin, and the product function is relatively single, the Weifang Yangjiabu traditional kites are insufficient in the degree of innovation, the form of the old, not able to satisfy the needs of the people nowadays, and unable to cope with the challenges brought about by the intensification of competition in the market and the diversification of the needs of the consumers today. Challenges brought by the diversification of market competition and consumer demand, thus

creating an imbalance between supply and demand, but at the same time this also brings opportunities for our innovation and exploration, we have carried out research data collection, and organization. We screened out the more suitable innovation and optimization of product design solutions, the main design idea is in Weifang Yangjiabu kites based on style, and the integration of other traditional folk culture elements related to the local as well as the more popular modern aesthetic elements, to carry out the attempt and practice of the intersection of tradition and modernity, to determine the theme of this kite innovation and design is "Integration - collision of the past and the present", we chose to Draw on the bamboo weaving and other cultural elements in the traditional culture of Weifang, Shandong Province for fusion and innovation, to realize the innovative expression of the localized design language in the kite's form, color and pattern. The aim is to create a design that carries the essence of traditional culture while adapting to modern aesthetic and functional needs through the in-depth fusion of traditional kite-making techniques and modern design concepts. The design will focus on the integration of tradition and modernity to adapt to the new ecological environment, adapt to the new social function identity, form a new value chain, and try to realize the inheritance and innovation of kite art in adapting to the opportunities and challenges. The design will try to deeply excavate the classic traditional elements of traditional kite making, such as tying techniques, pattern design, color matching, etc., and integrate and combine them with other traditional folk arts, to retain the characteristics of traditional kites, but also to enhance the innovation of kites as well as the visual artistic effect.

Traditional kites are mostly used for entertainment and ornamental purposes, while modern kites are endowed with more social significance and functions. This design will explore the application of kites in the fields of art decoration, cultural exchange, interior decoration, etc. Designing kite art design products with strong visual decorative and far-reaching cultural significance will enhance the value of kites in modern society to adapt to the new social functions and social identities in the new cultural value chain In addition, it further promotes the sustainable development of the kite industry and will continue to expand the market space of the kite industry through the development of its related derivatives and services, such as kite-making experience courses and related cultural activities. The kite innovation design of "Fusion - The Collision of Past and Present" is a deep excavation of traditional kite art and an innovative attempt at modern design. By integrating tradition and modernity, adapting to the new ecological environment and social function identity, forming a new value chain, and responding to opportunities and challenges, we expect to create a new type of kite product that carries traditional cultural heritage and is full of modernity, contributing to the sustainable development of the kite industry and the inheritance of traditional culture.

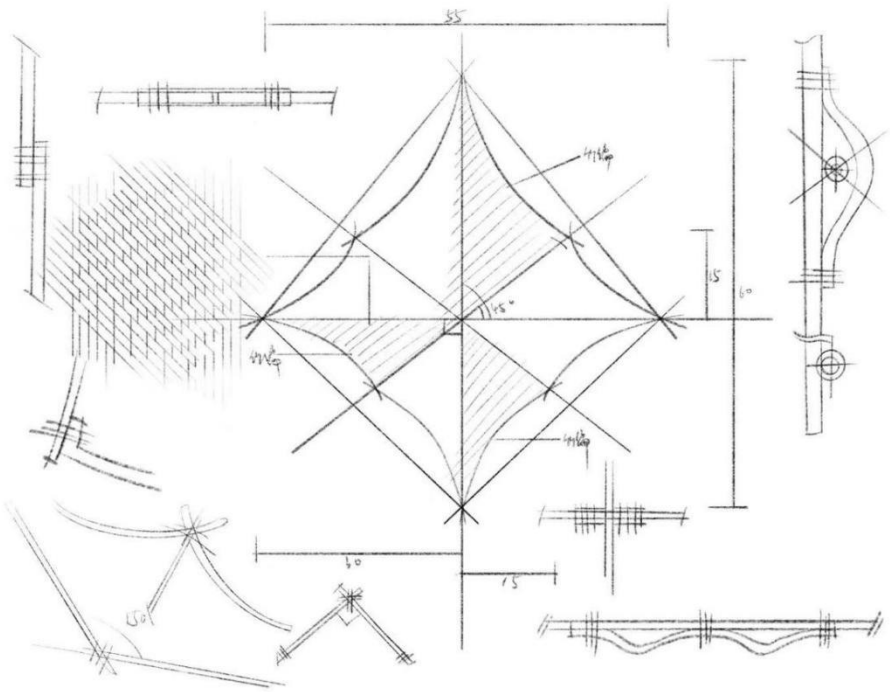

Figure 67 Hand-drawn design 7
Source: Susu Zhang,2023.2.11, Design Drawing

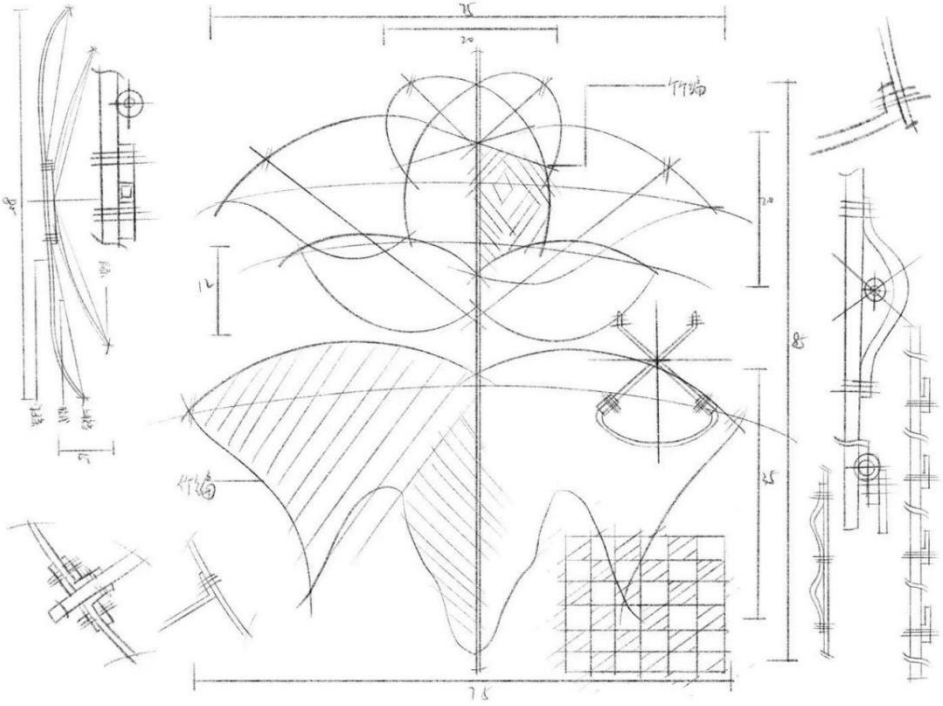

Figure 68 Hand-drawn design 8

Source: Susu Zhang,2023.2.12, Design Drawing

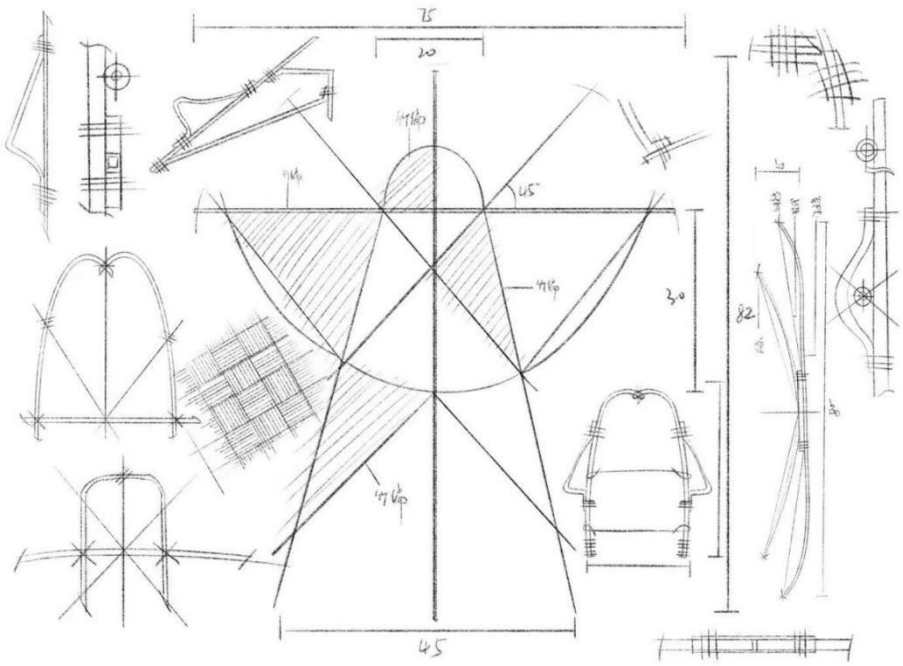

Figure 69 Hand-drawn Design 9
Source: Susu Zhang,2023.2.13, Design Drawing

5.5.3.2 The creative process

The traditional art of kite flying and bamboo weaving in Yangjiabu, Weifang, and Shandong Province, both have a deep historical background. When these two traditional arts meet, what sparks will collide? Fusion - The Collision of Past and Present is a perfect interpretation of this exploration. This set of works not only demonstrates exquisite craftsmanship but also reflects the infinite possibilities of artistic innovation. The creation of "Fusion - Past and Present Collision" is inspired by the profound thinking about the fusion of tradition and modernity. As the two representative traditional handicrafts of Yangjiabu, kite art, and bamboo weaving art have a long history and exquisite skills. How to skillfully combine them to create works that carry the essence of traditional culture and also reflect modern aesthetic interests became the primary challenge we faced.

After repeated refinements and attempts, we finally decided to use the goldfish kites and swallow kites from the traditional kites of Yangjiabu in Weifang, Shandong Province as the basis of creation, and at the same time use the bamboo weaving technique as an auxiliary to integrate and innovate. For example, the goldfish kite, a classic of Yangjiabu kites, has always been loved by people for its vivid shape and auspicious meaning. Under the craftsmen's skillful hands, the bamboo weaving

technique adds more layers and details to the goldfish kite with its fine weaving and rich variations, which not only inherits the traditional four major techniques of tying, gluing, painting, and releasing but also integrates a large number of innovative elements into the process of designing and making, making each goldfish kite a perfect example of the traditional kites of Weifang, Shandong Province. This makes each goldfish kite a unique piece of work and gives new life to traditional kite art.

The selection of materials is the first and crucial step in kite making. The craftsmen will select tough and lightweight bamboo gabions as the skeleton of the kite, which has been specially treated to ensure their strength and reduce their weight. Various kinds of paper and cotton threads are also prepared for testing, to find more suitable materials for the gluing and decorating of the kites. For the bamboo weaving part, the bamboo weaving craftsmen in Weifang were specially invited to teach them the relevant skills and techniques of bamboo weaving and to discuss how to integrate the kite with bamboo weaving. After practice, we chose bamboo silk with fine texture and even color as the weaving material and prepared various types of weaving tools and auxiliary materials. These carefully selected materials laid a solid foundation for the subsequent production.

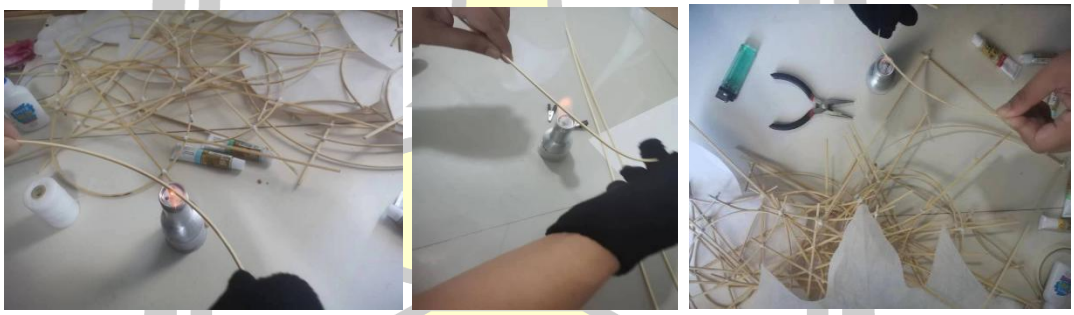

Figure 70 The process of making the design work 6
Source: Susu Zhang,2023.2.17, Photography

In the process of making the skeleton of the goldfish kite, we utilize traditional kite-making techniques, carefully designing the structure of the skeleton according to the shape of the goldfish, then baking the bamboo splints with fire to make them more pliable to make the splints into the desired shapes, and then making the splints into the shape of the goldfish with the silk threads, striving to be precise in every detail to ensure that the kite can maintain a stable posture. After the skeleton and bamboo weaving are completed, the kite is then glued and decorated with bamboo weaving.

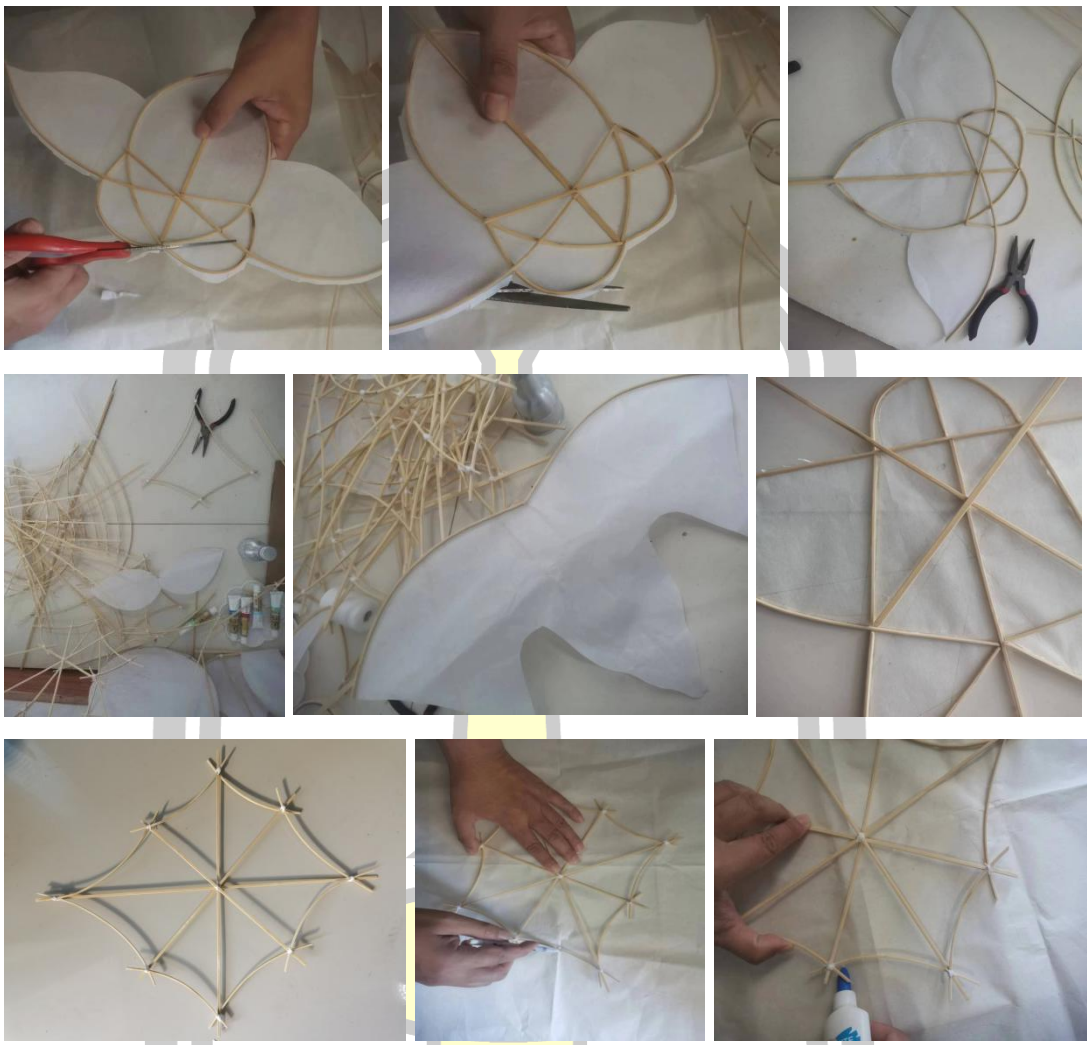

Figure 71 The process of making the design work 7
Source: Susu Zhang,2023.2.19, Photography

After the skeleton is finished, it is time for mounting and decoration. The craftsmen will choose the right thickness and color of rice paper, cut it carefully, and then stick it on the skeleton. At the same time, we also use the bamboo weaving technique to add more details and layers to the goldfish kite, trying to integrate the Weifang bamboo weaving art into the production of the kite, they will weave the bamboo wire into a variety of exquisite patterns and textures, and then carefully cut and skillfully inlaid in the kite, to make the kite's visual effect more rich and interesting, but also more of a bamboo weaving sense of texture and flavor. These bamboo elements not only enrich the visual effect of the kite but also give it a deeper cultural connotation and symbolism.

Figure 72 The process of making the design work 8
Source: Susu Zhang,2023.2.23, Photography

As a work of fusion and innovation, "Fusion - The Collision of Past and Present", with its vivid goldfish forms, exquisite bamboo weaving patterns, vibrant color combinations, and unique creative themes, not only embodies the exquisite skills of traditional handicrafts, but also the practice of constantly trying new combinations and matches in the selection of materials, and even more so, demonstrates the infinite possibilities of artistic innovation. Based on inheriting and carrying forward traditional skills, the creators boldly try new materials, new techniques, and new design concepts, blending tradition and modernity perfectly. This spirit of innovation and exploration is not only reflected in the expression of the work but also its cultural connotation and aesthetic interest. Through this work, we can deeply feel the unique charm and value of traditional handicrafts in modern society.

5.5.3.3 Demonstration effect and interpretation

Figure 73 Design Showcase 5
Source: Susu Zhang,2023.5.16, Photography

Weifang Yangjiabu Kite Art and Weifang Bamboo Weaving Art are important parts of Weifang local culture, we try to integrate these two art forms into innovative design and practice, through the joint efforts of the design team, and we have produced the results of the design, which is the "Integration - the collision of the past and the present" this set of design works. This work is not only a tribute to traditional handicrafts but also a practice of the spirit of artistic innovation.

As an innovative work, the highlight of "Fusion - Collision of Past and Present" is the skillful fusion of the traditional Yangjiabu kite art and Weifang bamboo weaving art. We have deeply explored the intrinsic connection and commonalities between these two art forms, and through careful design and production, they have been revitalized and energized under modern aesthetic concepts. In the works, we can see that the spirit of Shandong Yangjiabu kites and the delicacy of bamboo weaving art are intertwined with each other to form new design works. As the main body of the work, the Yangjiabu kite from Weifang, Shandong Province, lays a strong cultural foundation for the work with its silhouette and expression, while the use of bamboo weaving elements injects more details and layers into the work, which breaks the original form of the traditional kite work and makes the innovative work more novel and personalized. The exquisite and cleverly woven bamboo art with bright colors echoes the traditional and simple kite art, which is not only the inheritance and development of traditional handicrafts, but also the exploration of modern aesthetic concepts. In the works, we try to deeply excavate and organize the traditional art forms, and at the same time integrate the modern aesthetic concepts and methods of expression, this innovative spirit and brave attempts, not only for the traditional art forms to inject new vitality, but also the development of modern art to provide a useful reference and revelation, this perfect fusion of tradition and modernity not only demonstrates the mastery of handmade crafts, but also reflects the infinite charm of artistic innovation. This perfect fusion of tradition and modernity not only demonstrates the mastery of handicrafts but also reflects the infinite charm of art.

Figure 74 Design Showcase 6
Source: Susu Zhang,2023.5.16, Photography

The process of making kites in Yangjiabu, Weifang, Shandong Province is a comprehensive handicraft that combines various skills such as carpentry, painting, and calligraphy. It not only reflects the craftsmen's exquisite skills and profound cultural heritage but also is the treasure of traditional Chinese kite art. Each Yangjiabu kite is the crystallization of the craftsmen's hard work and wisdom, and they carry people's aspirations and pursuit of a better life, as well as pass on the excellent traditional culture of the Chinese nation. As a set of innovative works that perfectly integrates the art of Yangjiabu kites with the art of Weifang bamboo weaving, the innovative design of kites is not only a kind of inheritance and development of traditional handicrafts, but also an in-depth exploration and practice of localized design language, and at the same time, it is also a new aesthetic experience and cultural thinking. It shows us the collision and fusion between tradition and modernity, past and present, and is a useful exploration and attempt at the inheritance and development path of Yangjiabu kite art and bamboo weaving art. Through the design, we hope to arouse people's memory and recognition of traditional culture, and at the same time inject new vitality and inspiration into modern design. In addition, kite products with distinctive localized characteristics are also expected to become ambassadors of cultural exchanges and show the unique charm of Chinese design in the international market.

Upon completion of this phase, the newly designed products were presented to experts and related workshop entrepreneurs for product evaluation, as shown in the following section.

5.6 Evaluation and Improvement of Design Results

5.6.1 Market Research

Market research is an important basis for the improvement of the work, market research can assess the market value of the design work by quantitatively analyzing the evaluation of the design work by potential users or consumers, and can understand the real feelings and attitudes of consumers towards the design work, and help to determine the problems and shortcomings in the design work. Through the analysis of the feedback of the evaluated, designers can understand the consumers' views and suggestions on the design works, and then improve and optimize the problems. To better adjust and improve the design scheme, through questionnaires, interviews, and other means, to understand the consumer's perception of the product, expectations, and other circumstances, to provide a basis for evaluation as well as the improvement of the results of the work.

5.6.2 Expert Validation and Evaluation

I had the honor of discussing and evaluating the design results with the workshop manager, craftsmen, and experts respectively, and firstly, I presented the project design results for the workshop and related beneficiaries. After discussion and in-depth analysis with the experts, the experts gave a high evaluation of the design proposal and considered that the design work was outstanding in the extraction and application of cultural elements and innovation, but there were still defects and problems. For example, Prof. Zhang thinks that: the creativity of the design work is excellent, the material selection of the work is appropriate, focusing on the original material, and the production process is excellent, in the design, we can learn from the production methods and techniques of folk crafts, combine with modern science and technology to pass on and carry forward the kite making techniques, further excavate and practice the cultural memory and aesthetic demand of Yangjiabu kites, and create a work that has a folk flavor and is full of modernity, but there is still room for improvement on the treatment of some details, and there are still defects and problems in this design. However, there is still room for improvement in some details, such as color matching and details of craft performance can be more exquisite; Designer Li thinks: the design concept of the design work is novel, combined with the regional cultural characteristics, digging the cultural connotation of Weifang area, and integrating the elements of traditional folklore and local customs into the design of kites, to make it have regional characteristics, the design work is not only a material existence, but also a spiritual and emotional embodiment, which can reflect the folk cultural memory. The design work is not only a material existence, but also a spiritual and emotional embodiment, which can reflect the folk culture memory, with high cultural value and in line with modern aesthetic trends. Chen market analysts believe that the cultural value of the design work is high, and can have a high added value premium, the creativity is unique, respecting and excavating the origin and connotation of folk culture, at the same time combining with modern design concepts and technology, realizing the organic fusion of tradition and modernity, the work introduces the modern art style, and integrates the elements of abstraction, minimalism and modernity into the design of the kite, to make it have a modern sense of aesthetics, with visual impact and artistic infectivity, but it needs to further consider how to position and promote it in the market.

To get more accurate data, the organization arranged a questionnaire scoring session and asked the operators of the workshop enterprises, relevant beneficiaries, and potential consumers to evaluate the project results respectively.

Survey questionnaire on innovative kite products in Yangjiabu, Weifang, Shandong

*Question 1: Do you know about Yangjiabu kites in Weifang, Shandong?
☐ Yes
☐ No

*Question 2: How did you learn about Yangjiabu kites? (Multiple Choice)
☐ Online media
☐ TV coverage
☐ Books and magazines
☐ Recommended by friends or family
☐ Travel or on-site investigation
☐ Other

*Question 3: What do you think of the cultural added value of Yangjiabu's innovative kite products?
☐ Very high
☐ High
☐ General
☐ Low
☐ Very low

*Question 4: In your opinion, what is the market potential of Yangjiabu's innovative kite products?
☐ Very large
☐ Big
☐ General
☐ Small
☐ Very small

*Question 5: How attractive do you think the commercial packaging of Yangjiabu kite innovative products is?
☐ Very attractive
☐ Attracting
☐ General
☐ Not very attractive
☐ Completely unattractive

*Question 6: What do you think is the fun of Yangjiabu's innovative kite products?
☐ Very interesting
☐ Interesting
☐ General
☐ Uninteresting
☐ Very boring

*Question 7: From the perspective of product practicality, what do you think is the practicality of Yangjiabu's innovative kite products?
☐ Very practical
☐ Practical
☐ General
☐ Not very practical
☐ Completely impractical

*Question 8: Have you had an emotional experience when using or interacting with Yangjiabu's innovative kite products?
☐ Yes, very strong
☐ Yes, quite strong
☐ General
☐ Almost none
☐ Not at all

*Question 9: What do you think is the level of innovation in Yangjiabu's innovative kite products?
☐ Very innovative
☐ Innovation
☐ General
☐ Lack of innovation
☐ No innovation

*Question 10: What is your evaluation of the material suitability of Yangjiabu's innovative kite products?
☐ Very applicable
☐ Applicable
☐ General
☐ Not very applicable
☐ Not applicable at all

*Question 11: What does the appearance design of Yangjiabu's innovative kite products give you?
☐ Very beautiful
☐ Aesthetics
☐ General

Figure 75 Assessment and scoring by experts and relevant beneficiaries
Source: Susu Zhang,2023.11.9, Photography

Figure 75 shows the evaluation of the experts, who, together with the heads of the workshop enterprises, discussed and evaluated the research results in terms of cultural value-added, market potential, commercial packaging, fun, product practicality, emotional experience, degree of innovation, applicability of materials, appearance and shape as well as production technology. The results were scored and presented in the form of a table, and the evaluation results are shown in the table below.

พหูนํ ปณฺฑิโต ชีเว

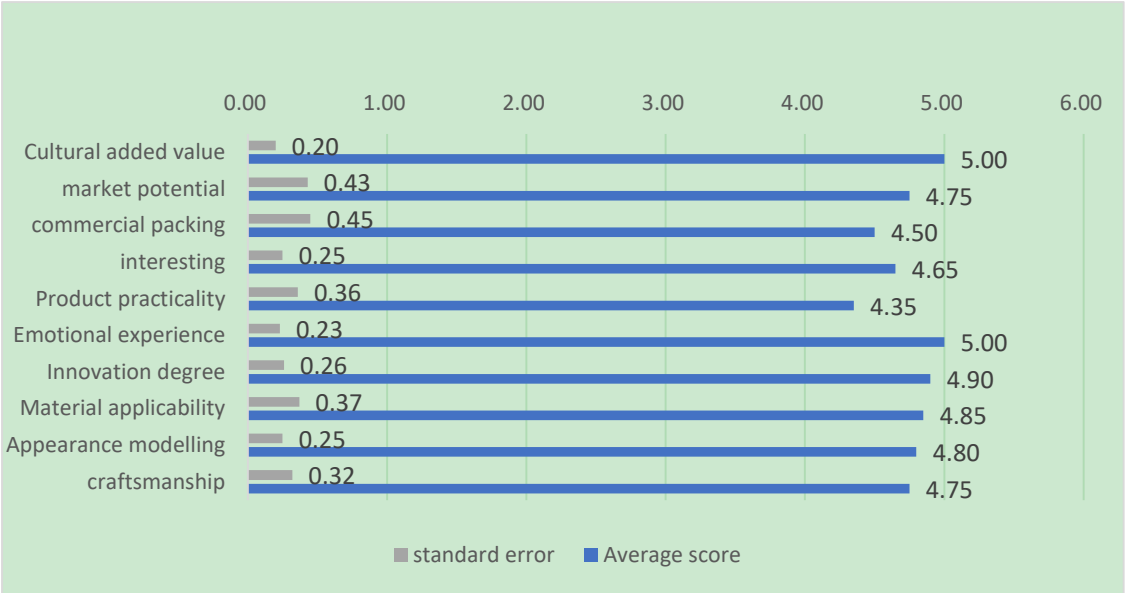

Table 10 Evaluation of products by experts and heads of enterprise workshops
Source: Susu Zhang,2023.11.10, Design Drawing

Table 11 shows the scores given to the product by the experts as well as the heads of the business workshops. The overall mean score of 4.76 indicates a high level of satisfaction. The results for each item were ranked from highest to lowest as follows: cultural added value (= 5.00), emotionalizing experience (= 5.00), degree of innovation (= 4.90), material suitability (= 4.85), exterior styling (= 4.80), market potential (= 4.75), craftsmanship (= 4.75), fun (= 4.65), and commercial packaging (= 4.50), Product utility (= 4.35). The above data indicated that overall, respondents were satisfied with the newly developed products.

The research team then surveyed the evaluation of potential consumers, with data from questionnaires, etc. The research results were discussed and evaluated in terms of purchasing possibilities, cost-effectiveness, craftsmanship, emotional experience, innovativeness, local characteristics, commemorative significance, symbolic connotations, practicability, and appearance and styling. The results were scored and presented in the form of a table, and the evaluation results are shown in the table below.

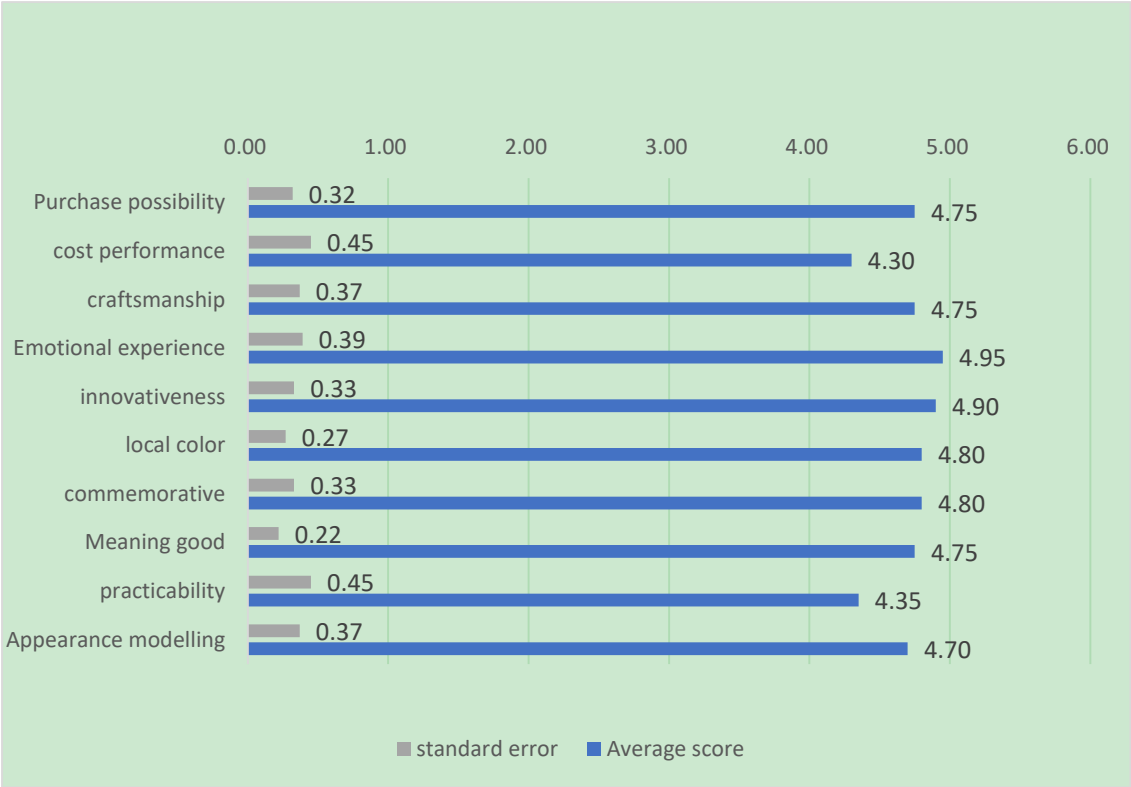

Table 11 Consumer ratings of products
Source: Susu Zhang,2023.11.14, Design Drawing

Table 12 shows the consumer rating scores for the products. The overall mean score of 4.70 indicates a high level of satisfaction. The results for each item were ranked from highest to lowest as follows: likelihood of purchase (= 4.75), value for money (= 4.30), craftsmanship (= 4.75), emotional experience (= 4.95), innovativeness (= 4.90), local characteristics (= 4.80), commemorative significance (= 4.80), symbolic connotation (= 4.75), utility (= 4.35), appearance modeling (= 4.70). The above data suggests that, in general, the respondents are satisfied with the newly developed products.

Finally, the research team conducted a survey on the financial contribution of the stakeholders, which was derived from the workshop's financial situation from July 1, 2023, to October 31, 2023, and examined and evaluated the aspects related to the product, such as customer traffic, cost of production, selling price, average monthly sales volume, and average monthly profit. The results were scored and presented in a table, and the results are shown in the table below.

Project	Before product update	After the product is updated
Monthly average passenger flow	435 (number of people)	654 (number of people)
cost of production	40（CNY）	55（CNY）
selling price	60（CNY）	90（CNY）
Monthly average sales	1200（CNY）	2700（CNY）

Table 12 Financial contribution to stakeholders
Source: Susu Zhang,2023.11.14, Design Drawing

Table 13 shows the financial contribution to stakeholders. Newly developed products added an average of CNY 1,500 per month, equivalent to a 55.6% increase in sales.

The above data show that the research results, whether it is the evaluation of experts and workshop enterprises or the evaluation of potential consumers and the actual sales situation can show that the research and exploration of the operation and management of the value chain of folk art and culture has a positive significance to the design practice. It can lead to a broader perspective to understand the appearance of folk art and culture, observe and study folk art and culture from the perspective of historical development, which has certain practical significance in measuring and predicting the development direction of folk art, and can also gain benefits in traditional cultural inheritance of folk art, identity, and improvement of economic benefits, and is also conducive to better connecting and combining the various aspects of folk art and culture related departments and organizations. At the same time, it is also conducive to linking various departments and organizations related to folk art and culture together, increasing joint discussions to improve knowledge and understanding of folk art and culture, and broadening the possibilities and paths of cultural innovation.

Based on the results of the various evaluations and arguments above, we come to the following conclusions:

The implementation process of this kite innovation design will give full consideration to factors such as market demand and consumer preferences and will be reasonably planned in conjunction with the actual production conditions and requirements such as cost control. Through continuous improvement and optimization of the design scheme, we will finally create a kite product that is both competitive in the market and able to reflect the traditional cultural heritage. The design work has made useful explorations in the inheritance of folk art and culture as well as the condensation and extraction of cultural symbols and has high value and market potential, but it needs to be further optimized and perfected in the aspects of detail processing, market positioning, technical realization, and market promotion. To better utilize the value and market potential of this design work, we suggest to make improvements in the following aspects:

(1) further optimize the production process and improve the delicacy and aesthetics of the design work;

(2) further strengthen the practicality of the work as well as further explore the needs of users, analyze and improve the market positioning, formulate a comprehensive marketing strategy, and improve the market awareness and share of the work;

(3) further strengthen the integration with other arts and cultures such as Weifang Yangjiabu New Year's Paintings, and strengthen the cultural integration.

5.6.3 Improvement of Design Results

According to the analysis and evaluation results of the design results, I made a plan to improve and optimize the design work.

(1) Color collocation improvement, optimize the color collocation of the kite to make it more visually impactful and artistically infectious. Based on traditional color matching, add modern elements, such as using popular colors to embellish the kite and increase its fashion sense. Pay attention to the psychological effect of color, and use different colors to represent different emotions and imagery, so that the kite works have more emotional expression.

(2) Improve the production technology, improve the production technology of kites, and improve the fineness and quality of its production. Focusing on the details, the kites' threads, patterns, colors, and so on are finely polished and perfected to improve their overall sense of quality.

(3) Strengthen the integration efforts with other arts and cultures such as Weifang Yangjiabu New Year's Paintings, and strengthen the cultural integration efforts.

Conclude

This chapter is mainly based on the research content, design concepts, and relevant theoretical basis for the planning and drawing of design sketches and screening, followed by the application design practice of Shandong Weifang Yangjiabu kites, exploring the new combination of Shandong Weifang Yangjiabu kite materials, shapes and other elements with modern decorative design, and seeking a new combination of kite culture and modern art design paths as well as breaking through the traditional design mode of the kite. The design results will be tested and evaluated at the same time. Meanwhile, the design results will be tested evaluated, and improved and optimized according to the evaluation results. Through this research and art creation practice, we will further enrich the language of decorative creation as well as the experience of creation practice, provide an interconnected way of thinking for the inheritance of traditional culture, and promote the integration and

innovation of folk art and foreign culture, to provide some ideas and suggestions for the development of related fields. The final section, Chapter 6, provides a general overview of the study and summarizes the research, describing the research summary, research discussion, and research recommendations.

พหูนํ ปณฺฑิโต ชีเว

CHAPTER VI

Research Summary, Discussion, and Suggestions

6.1 Research Summary

Research topic: Social life and cultural innovation of kite art in Yangjiabu, Weifang, Shandong, China under the threshold of cultural ecology.

Research method: This study adopts the "qualitative research method".

Information Collection Methods: This study adopts two information collection methods: fieldwork and literature research.

Research objectives: The research objectives of this study are as follows.

6.1.1 Exploring Kites and Cultural Ecology in Yangjiabu, Weifang, China

Geography and the natural environment have a great influence on the emergence and development of culture in a region, and different types of ecological environments have formed a unique folk art culture. Weifang City, Shandong Province, China is located in the middle of the Shandong Peninsula on the edge of the "JiaoLai Plain", which is in the middle of the Ruyi Mountain Range and the hilly area of the Jiaodong Peninsula, and extends from north to south to the vast Bohai Sea and Yellow Sea; the "JiaoLai Plain" in the middle of the Ruyi Mountain Range and the hilly area of the Jiaodong Peninsula has become a peninsular area of the country. The "JiaoLai Plain" in the middle of the LuYi Mountain Range and the Jiaotong Peninsula hilly area has become a natural wind channel for the peninsular climate and the monsoon winds of the Bohai Sea and the Yellow Sea, which is rich in wind resources in all seasons, and it is a good site for kite flying. Nature has given "Weifang Kites" natural geographic conditions for long-term development, which is a natural factor for the development of kites in Weifang's specific regional environment. In addition, the materials used in the production of "Weifang Kites" also tend to be related to the cultivation of rattan and bamboo which are the unique habits of the folk in the Weifang area, as well as the history of humanities and the traditional folk customs, which shows that the formation and development of Weifang Yangjiabu Kites are closely related to the local geography, customs, local wisdom and culture. The survival of Yangjiabu kites is a complex system of the folk art system and belongs to a part of the social system, Yangjiabu kites survival mechanism and principles an ecosystem in biology, its survival and development are not isolated, it has a close relationship with the social environment in which it survives (Song, 2015). In the cognition of its survival or decline, we must go beyond the limitations of folk art itself and put it back into the

human ecosystem, and "observe" it from a larger and higher perspective and vision, so that we can fundamentally and essentially understand and grasp its development, survival mechanism and change rules.

From a holistic and symbiotic viewpoint, kite is a reflection of social life in a certain historical period, which is a synthesis of folklore, aesthetics, art, history, and other multiple factors. Modern cultural ecology provides a new research perspective and a holistic, systematic, and scientific research method for us to understand kites and study kites as a traditional handicraft, which helps to break through the academic level of kite research and provides theoretical support for us to analyze the connotation and development space of kite culture at a broader level.

6.1.2 Development and Socio-Economic Changes in Yangjiabu Kite Production, Weifang, China

The social environment is the most primitive foundation for the occurrence and development of Yangjiabu kites, and it is also the most fundamental element for the integrity and stability of the ecological chain of folk art. Kite flying is closely related to people's lives, besides being a healthy and beneficial fitness activity, it is also closely related to seasons, festivals, and farming. Kites are most suitable to be flown in spring and autumn, and Ching Ming and Chung Yeung have become the most closely related seasons to kites. In addition, in the countryside, the custom of kite flying is also closely related to the agricultural time. In Weifang Yangjiabu kite activities are mostly carried out in spring and autumn, the formation of this traditional custom has quite complicated historical reasons, but from an objective point of view, in addition to the two seasons with the wind direction is stable, the size of the wind is suitable for the weather conditions, it also has a close relationship with the folk's way of life, as well as the folk customs, kite flying is called "put Yu The kite-flying is called "letting go of depression", which is an attempt to get "good luck" and to let go of the "depression" accumulated over the year, which profoundly reveals the concepts of folk beliefs, fulfills the function of satisfying the spiritual life of the folk, and possesses certain psychological support, It has the functions of psychological support, spiritual edification, entertainment, and fitness, and is a living expression of traditional culture and social psychology. From kites, we can see one side of folk culture, and at the same time, folk culture also has a restraining effect on the themes and forms of kites. The kites in Yangjiabu, Weifang, and Shandong have experienced the historical lineage of germination, development popularization, and prosperity under social and cultural changes. Under the scrutiny of social and cultural perspectives, the development of kites is affected by different historical conditions and social cultures, and the way of interaction between kites and people is different in different historical periods and social and cultural conditions, which includes the different attitudes of people towards kites in different periods as well as the changes

of their feelings that the kites carry. It also includes the different attitudes of people towards kites in different periods and the changes in people's feelings carried by kites. In the interaction with people, kites constantly enrich and improve themselves, and have different roles and cultural values in different historical periods. Kites also have a great connection with other local folk arts, reflecting folk aesthetic consciousness, constituting a folk art ecosystem, constituting the traditional culture of Yangjiabu, and embodying the people's aesthetic concepts, aesthetic ideals, aesthetic interests, and aesthetic emotions (Lv, 2016).

From the development of the cultural value chain changes can be seen in the folk art ecological environment, materials, heritage groups, functions, managers, and audiences are changing, folk art culture should be changed in time to adapt, otherwise the traditional concepts and aesthetics to produce a cognitive generation gap, the cultural heritage is facing the risk of the lack of generation break. Among them, traditional cultural memory is the inherent foundation for the continuation of national history and cultural genes, and the traditional cultural memory of Weifang Yangjiabu kites not only contains the development history but also includes its local wisdom and skills as well as traditional folk customs and culture. Protecting the traditional way of passing on folk art skills is an important link for the continuation of folk art. The traditional way of inheritance is not only the production technology but also the memory and cultural identity. The traditional way of inheritance not only ensures the inheritance of skills but also maintains the simple and natural cultural connotation of handicraft production and related folk customs. The excavation and inheritance of local cultures, such as customs and habits, should be emphasized in the design and production of artworks, to awaken people's memories and identities of local culture, history, and customs, and also to make young people understand more about the value and significance of local culture and improve their sense of cultural identity, so that they can better inherit and carry forward the traditional culture of these folk arts. Folk art is not only a work of art or a decorative object, but also an expression of values and emotions. Only by continuously strengthening the inheritance of traditional folk art and cultural memory can folk art be better preserved and innovatively developed.

In addition, traditional technology is an important part of folk art and culture, traditional technology makes handicrafts have unique artistic charm and ornamental value, with great artistic and cultural value, not only is the inheritance entity of traditional folk culture, for the people effectively provide material services but also can provide a rich design element for modern design. Different from modern technology, traditional Yangjiabu kites use purely handmade methods of bamboo cross-binding and pasting hand-painting, and the natural traces of such handmade work can produce a unique sense of rhythm and emotion, emphasizing the rustic beauty of the kite's material, which is the value of harmony and unity between nature and human beings, and these are difficult to be replaced by machines. This return to the application of traditional handicrafts not only helps to reduce pollution and

damage to the environment but also meets consumer demand for personalized, customized, and emotional products. The return of traditional folk art design language is not only the respect and inheritance of traditional folk art culture but also the innovation and development of traditional folk art, as well as the construction and protection of the folk art ecosystem.

6.1.3 Generating and Managing Kite Culture Value Chain in Yangjiabu, Weifang: Cultural Innovation

Kites gradually developed into commodities through a long period of development, and gradually developed into a specialized occupation, when kites went from the folk custom of "flying bad luck" to commercialization. With the self-sufficient small peasant economy providing an ecological environment for the development of folk art, after the gradual disintegration of the big family, the great impact brought by the capitalist economic system made the production mode of kites change, and the production mode became more and more detached from the family, and began to take the factory production as the mainstay, and the efficiency enhancement brought about the vicious circle of low price competition, which seriously affected the reputation of the kites in Weifang until 1978 when the reform and opening up was carried out. After the reform and opening up, Weifang kites were revitalized and re-organized, and Weifang was chosen as the "World Kite Capital" by the domestic and foreign kite industry, and the Weifang International Kite Festival was listed as the cultural heritage of UNESCO Folk Art Organization and folk protection project. The specific geographic environment, natural factors, historical and humanistic factors, and folk culture and art connotation of "Weifang Kites" contributed to the birth of the "Weifang International Kite Festival" and the long-term development of this "international brand activity". The long development of this "international brand activity". As the industry matures, challenges and problems arise, such as changes in materials, heritage groups, and functions, the impact of modern production technology on traditional handicrafts, and the collision of local and foreign cultures, etc. Weifang government departments take advantage of its deep traditional culture and rich folk culture to take the strategic path of "cultural economy" and actively guide the development of the functions and functions of folk culture, as well as the development of folk culture. The governmental departments of Weifang take advantage of its profound traditional culture and rich folk culture to take the strategic road of "cultural economy", actively guide the development of the functions and potentials of folk culture, pay attention to the inheritance of traditional folk art and cultural memory, protect the recognition of traditional skills and culture, protect the ecosystems of folk art as well as utilize the integration of cultural exchanges to promote the innovative development of folk art and culture. The cultural value chain of the Yangjiabu kite arises from its profound historical and cultural heritage and unique artistic value. As a traditional Chinese folk handicraft, kites carry rich cultural

connotations and symbolism(Zhang, 2016). Yangjiabu kites have gradually formed a cultural brand with local characteristics due to their exquisite production skills, unique modeling design, and rich cultural connotations. Weifang kite industry has grown from small to large, the cultural industry of Weifang kites originated from the traditional kite commercial activities in Weifang and has become the characteristic industry of Weifang City, gradually forming the kite industry chain as well as the cultural value chain.

With the progress of society and economic development, the cultural value chain of Yangjiabu kites has been continuously expanded and extended. From the initial handmade production and sales, it has gradually developed into a complete industrial chain integrating design, production, sales, display, and tourism. At the same time, through the integration with modern technology and fashion elements, Yangjiabu kites have been innovated and more new products with characteristics of the times have been introduced to meet the needs of different consumers, gradually achieving the purpose of protecting and developing the intangible cultural heritage of Yangjiabu kite-making skills, and the collision with foreign cultures has brought about cultural integration, which has played an important role in enhancing the popularity of Weifang, promoting the fusion of cultural exchanges, and promoting cultural innovation, etc. It has played an important role and made significant contributions to the development of the local economy and society. The management process of the Yangjiabu kite culture value chain, while focusing on the protection of traditional skills and inheritance of cultural spirit, actively introduces modern management concepts and market operation mechanisms. By strengthening brand building, improving product quality, expanding sales channels, and other measures, the market competitiveness and influence of Yangjiabu kites are continuously improved. At the same time, it focuses on the protection of intellectual property rights and the cultivation of cultural inheritors, which provides a strong guarantee for the sustainable development of Yangjiabu kite culture.

The generation of the Yangjiabu kite culture value chain as well as the management process can be seen in the inspiration of cultural innovation, through strengthening brand building, improving product quality, expanding sales channels, and other measures to continuously improve the market competitiveness and influence of traditional culture, traditional culture is a valuable resource, through in-depth excavation and sorting out, you can find more cultural elements with unique charm and market potential. In addition, from the development of kite culture value chain in Yangjiabu, Weifang, it can be seen that the key to the current development is to promote the cultural innovation of kite skills to adapt to the changes in the cultural value chain, so based on inheriting the traditional culture, it is necessary to actively introduce the modern technology, fashion elements and other innovative factors, to maintain the uniqueness and originality of the traditional culture, and at the same time to strengthen the exchange of cooperation and promote the dissemination and

exchange of information between different cultures, and to introduce new perspectives. At the same time, it should strengthen foreign exchanges and cooperation, promote the dissemination of information and exchanges between different cultures, introduce new perspectives, concepts, and resources, and jointly study and develop folk art and culture, to provide impetus for cultural innovation. When two or more cultures merge, they will penetrate and merge to form a new culture and cultural chain, which will provide development opportunities for the inheritance and innovation of traditional folk art. Therefore, Shandong Weifang Yangjiabu kites can take more initiative to promote the learning and borrowing of other cultures' excellent elements for self-renewal and development, and further promote the development of diversity as well as cultural innovation in enriching Weifang kites.

6.2 Research Discussion

In this thesis, I tried to study the local folk art of kites in Yangjiabu, Weifang, Shandong Province. Through reading the literature, I found that the previous studies mainly focused on the history of kites, the artistic characteristics of kites, and the regional characteristics of kite-making crafts, etc. At the same time, there are also some studies linking kites with the natural environment, socio-political and economic development, linking traditional folk arts such as Weifang kites and New Year paintings with regional culture, proposing the role and status of kite folklore in people's material life and spiritual culture, and seeking the common development between economic development and folk culture. Weifang kites, New Year's paintings, and other traditional folk arts are linked with regional culture, the role and status of kite folklore in people's material life and spiritual culture are put forward, and the co-development between economic development and folk culture is sought, etc. These detailed research materials are useful for theories and theories about kites. These detailed research materials are still very helpful for the construction of the theoretical model, which is the premise and foundation of theoretical processing and improvement. However, the above researchers usually pay more attention to the physical and artistic characteristics of folk art and culture itself and study the materials, techniques, and crafts more deeply and thoroughly, but they are often regarded as "static and simple" artifacts, not as "things" with vitality and in the process of development, and are not studied from the perspective of cultural development. However, they are often studied only as "static and simple" handicrafts rather than as "things" with vitality and in the process of development, and comprehensive studies from the perspective of cultural value chain management are still rare. Failure to put folk art and culture into the whole cultural value chain to observe and discuss its generation and development as well as management, and failure to put the occurrence and development process of folk art and culture into the study of dynamic geography, history, humanities, economy, management, and other comprehensive elements may lead to folk art and culture not being able to be

recognized and utilized adequately, and not being able to fully substitute the cultural value and identity attributes into the design works. The cultural value and identity attributes of folk art and culture cannot be fully recognized and utilized, and cannot be fully incorporated into the design works. In recent years, with the development of various disciplines, interdisciplinary research has gradually become a trend, so it is meaningful and useful to study the occurrence and development process of folk art and culture from the perspective of the management of a historical and comprehensive cultural value chain. The most critical cultural innovation problem can only be solved by observing and analyzing the inheritance and cultural innovation of local folk art and culture from a comprehensive and developmental perspective. Value chain is a systematic method to analyze the improvement of competitive advantage. The value chain of an enterprise or industry is embedded in a larger stream of activities, which is called a value system. Gaining sustained competitive advantage depends not only on the value chain of a company or firm but also on how that company fits into the overall value system. Processes, including production and consumption, consist of interlinked activities. The concept of "chain" suggests that these activities are integrated. The value chain framework is therefore very useful for competitive analysis and strategy development. Cultural products have a strong symbolic value, which is determined by the social and cultural significance associated with them, allowing consumers to express their personal and social identities through the purchase and use of the product. The value chain based on the model study of the development of cultural and creative industries can help to further understand how the value chain of the cultural products industry serves the consumers, and the beneficiaries involved and how operators can use the study to build sustainable competitive advantages. competitive advantage.

Therefore, this study focuses on the local natural environment, economic development, social and cultural influences on folklore, and seeks the co-development relationship between economic development, cultural value chain, and folklore culture, and describes the process of commercialization of folklore as well as the development and management of the value chain. In addition, it analyzes the three stages of development that the Weifang International Kite Festival has gone through: the initial stage of conception, the transitional stage of wandering, and the stage of innovation and development, and reveals the transmutation of the roles and functions of the government and the relevant personnel in this process of change. Social capital theory is combined with value chain analysis and management to realize the value of the SDGs in the region as much as possible. This capital power is very important for the formation of local sustainable development. However, this abstract concept needs to be translated into more practical and simple steps to be realized by all stakeholders. This vacuum is then realized through the concept of the value chain. This concept can be used as a way to embrace every member of the community, government, and industry. The development and management of the value chain is a combination and

result of social, cultural, and environmental capital. An in-depth study of the relevant operations in the value chain can expose the relationships and linkages between these operations, which can predict development trends or expose additional opportunities for development innovation for the beneficiaries involved (Bilgen Mete and Elif Acuner, 2014). This study provides an academic discussion on the concepts of social life and cultural innovation, as well as the development of kite folk culture in the local cultural ecology, development, and other processes of development, using the concept of value chain analysis as the basis of discussion for the discussion and study of local folk culture research, as well as focusing on the impacts of the value chain research on marketing strategies and cultural innovation. The study of the operation of the value chain and the management model helps to improve the adaptability as well as to carry out the development of cultural innovation, which is conducive to sustainable development (Jakobus Smit, 2015).

In conclusion, if local folk art and culture want to achieve sustainable and benign development, we need to study the operation and management environment and mode of different stages of cultural generation and development, analyze the interaction between people, objects, economy, politics, and culture, to have a more in-depth and comprehensive understanding of the reasons for the emergence of the value chain of folk art and culture and its operation status. At the same time, the theory is applied in practice to help predict the direction and mode of cultural innovation, help local enterprises and stakeholders customize strategies, and improve products and services. On this basis, the following research questions are raised: How do the ecological and social environments play a role in the kites in Yangjiabu, Weifang? As a local folk art, how does the cultural value chain of kites occur, develop, and operate? How does kite culture interact with the local community in the value chain? To what extent can this cultural value chain management research play a role in the innovation of local indigenous folk art culture and the improvement and development of local enterprises and related product industries? Therefore, I try to put the folk culture into the perspective of the cultural value chain, and comprehensively use the relevant theories and methods of design and art to make an in-depth investigation, analysis, and research on Weifang kites, hoping to attempt to explore the origins of Weifang kites, the meaning of the changes, the value of the development of the development of innovation and development and so on.

6.2.1 Influence of Cultural Ecology and Social Life on Yangjiabu Kite Development in Weifang

Different topography, different forests and water systems, and different types of climate will constitute different natural ecological environments, which will have a direct impact on local production methods, customs, and habits, and human beings will create different levels of rich and colorful cultural types. The geographic and

natural environment has a great influence on the generation and development of culture in a region. There are also obvious differences within the cultural ecosystem, and different types of ecological environments form diversified cultural communities and cultural circles, which together constitute the overall cultural ecosystem of human beings. Kite culture embodies the social and cultural ecosystem of each historical period, and can reflect the real situation of the natural, social, political, and cultural aspects of a specific historical period. Weifang City, Shandong Province, China is located at the edge of the "JiaoLai Plain" in the center of the Shandong Peninsula, which is in the middle of the Luji Mountain Range and the hilly area of Jiaodong Peninsula, with the "JiaoLai Plain" extending to the north and south in the direction of southeast and northwest. The "JiaoLai Plain" in the direction of southeast and northwest extends from north to south to the vast Bohai Sea and Yellow Sea; the "JiaoLai Plain" in the middle of the Lunyi Mountain Range and the hilly area of Jiaodong Peninsula has become a natural wind channel for the peninsular climate and the monsoon of the Bohai Sea and the Yellow Sea. Weifang is rich in wind resources in all seasons of the year, especially in the spring of every year, when the spring wind is strong, Weifang and the surrounding areas are good kite flying sites. Nature has given "Weifang kites" natural geographic conditions for long-term development, which is a natural factor for the development of kites in Weifang's specific regional environment (Ji & Shi, 2018). In addition, due to the history and folklore of the evolution and inheritance, kites have been popularized as folk crafts in Weifang. Therefore, the materials used in the production of "Weifang kites" tend to be unique and convenient to the folk of the Weifang region. The development of kites in Yangjiabu, Weifang is also closely related to the local wisdom of the region. Although they have not learned physics and geometry, these rich kite techniques and knowledge are deeply hidden in the minds of the craftsmen, and although they don't know the scientific theories of physics and geometry, they have summed up a set of knowledge adapted to life according to their own experience. The words "by feeling", "according to experience", and "measuring by eyes and hands", which are constantly mentioned by kite craftsmen, are the embodiment of local wisdom. With the development of the commodity economy, kites gradually became the subjects of literati and painters in the past generations, and at the same time, New Year's paintings, Chinese paintings, calligraphy, novels, literary characters, and allusions have also become the subjects of Weifang Yangjiabu kite patterns, so the reason why Weifang County in ancient China became the birthplace and development place of kites is that, in addition to the near-natural and superior natural geography, it also has profound humanistic and historical origins. The reason why Weifang has become the "Kite Capital of the World" nowadays, in addition to the modern times and the efforts of our generation, there are also the above humanistic historical origins here. The evolution of human history and the inheritance of folk traditions and customs are the humanistic factors for the development of the intangible cultural heritage of "Weifang kites" (Lv, 2016).

Kite flying is closely related to social life, in addition, kite flying is a healthy and beneficial fitness activity that is also closely related to the seasons, festivals, and farming, kites are most suitable for flying in the spring and autumn seasons Qingming and Chongyang have become the closest relationship with the kite season. In addition to the objective seasonal reasons, the combination of kites with Qingming and Chongyang festivals is also closely related to the popularity of kites among the people and the increasing secularization of traditional Chinese folk festivals. Kites were popularized in the Tang Dynasty with the widespread use of paper, and the entertainment function of kites could be fully demonstrated. The seasonal requirements for kite flying coincided with the time of Qingming and Chongyang Festivals, so kite-flying activities naturally became part of the activities of the two festivals. In addition, in rural areas, the custom of kite flying is also closely related to the agricultural time in terms of timing. Generally speaking, in most areas of China, the agricultural season starts from October of the lunar year to April of the next year. However, in the tenth month of the lunar calendar, except for a little farmland management, the main work of farmers is to organize and repair farm tools in preparation for the coming year's farming, while some of those who are skilled in handicrafts start their secondary production during this period. In the twelfth month of the lunar calendar, all activities are centered around the Spring Festival, cleaning, painting houses, grinding rice and flour, killing pigs and slaughtering goats, and putting up lanterns and decorations. From the first day of the first month to the fifteenth day of the first month, there are many essential annual activities. Therefore, kite flying is mostly carried out after the 15th day of the first month, because at this time the weather is warm, the east wind is rapid, and the agricultural affairs are idle, the grass and the trees are not yet fuzzy, the time and the site can be guaranteed, it is the best time for kite flying. Kite flying in the countryside is usually carried out in the fields. In areas where wheat is planted, wheat is only divided into millets and hair trees after Qingming "Qingming to, straw called" (Song, 2015). According to agricultural experts' research, points, before the wheat is not afraid to step on, such as stepping on the words, on the development of sprouting and plucking, has a certain role in promoting. Therefore, in the vast countryside, kite-flying activities usually come to an end around the Qingming Festival, and at the latest only until the beginning of summer. The first and foremost condition for kite flying is wind, theoretically speaking, as long as there is wind, kites can be flown. However, in China, kite-flying activities are mostly carried out in spring and autumn, and the formation of this traditional custom has quite complicated historical reasons, but objectively speaking, in addition to being related to the weather conditions such as stable wind direction and suitable wind size in these two seasons, it also has a close relationship with the folk's way of life. Kite flying is also closely related to the local folk customs in Yangjiabu, Weifang. Although it first appeared in its original form as a flying object, since it entered the folk world, it has been widely circulated in the folk world as a recreational toy, at this time, kites are closely connected with folk life, folk

beliefs, folk aesthetics, and consciousness, and the moral emotions, and they are closely connected, and they play a role in fulfilling the function of the folk's spiritual life. Some psychological support, spiritual edification, and entertainment and fitness functions. Therefore, from kites, we can realize that "folklore is the living expression of Chinese traditional culture and social psychology". In Weifang traditional kites, there are a lot of kites whose modeling is taken from myths and legends or historical stories linked with ancestral spirit beliefs, which are all closely related to beliefs and customs, and whose modeling is characterized by the expression of a kind of auspicious and good wishes. Praying for good fortune and avoiding disasters has always been a typical psychological demand for survival and life of the Chinese people, and it originated from the psychological expectation of the people for natural disasters and man-made scourges that they are powerless to conquer but eager to be able to resist, which is broad and deep. Psychological hope is widely and deeply penetrated in people's daily life, becomes a comforting spirit, and improves the fate of the important way to aspire to the good so, folk art objects create more manifested in the theme of disaster auspicious art creations, "red-hot", "lively", "lucky", "lucky", "lucky", "lucky", "lucky", "lucky", "lucky", "lucky", "lucky", "lucky", "lucky", "lucky" and "lucky". Therefore, the creation of kite artifacts is mostly expressed as the creation of auspicious art with the theme of disaster and good luck. "Red-hot", "bustling" and "auspicious" constitute the charm of folk art and the charm of wind art. Although not all kite contents express the folk concept of good luck, the shadow of auspicious symbols and patterns can be seen everywhere in the traditional Chinese kites. Kite artists in Weifang said that the old Weifang County called kite flying in spring "Flying Yu", which is a figure of "good luck". So far in the local folk there is this custom, Qingming Festival this day some people put the board kite flying high and far, and then intentionally cut the kite line, so that the kite with the wind, meaning that the year under the accumulation of the "depression of the gas" completely put out, can be in a year do not get sick. Therefore, from the kite, we can see a side of folk culture, and at the same time, folk culture also has a restraining effect on the theme and form of the kite. Folk artifacts as the carrier of folk culture are often also closely connected with folk beliefs and become the means and medium for the dissemination and transmission of folk beliefs and customs. After the invention of kites as flying objects, the practical effect of their ability to fly up to the sky meets the needs of the long-existing witchcraft concept of communication between man and god, so kites are combined with the idea of witchcraft and superstition and become a tool for people to express their wishes and emotions to the sky, which profoundly reveals the concepts of folk beliefs. The combination of kites with witchcraft and superstition itself has reflected the influence of ancient beliefs and customs on kites.

In addition, kites have a great connection with other local folk arts. Folk art objects are the physical form of folk cultural concepts, both practical and artistic, which on the one hand is deeply rooted in the fertile soil of people's lives and satisfies

their material and spiritual needs, and on the other hand, is a kind of creation of beauty, which is infused with people's own purely aesthetic feelings, reflecting the folk's aesthetic consciousness and embodying the people's concepts of aesthetics, Aesthetic ideals, aesthetic interests, and aesthetic feelings. Folk art objects are closely connected with folk aesthetic consciousness. For thousands of years, the shape, color combination, and material selection of kites have been constantly enriched and improved. Artists in Yangjiabu have organically integrated various historical allusions, myths and legends, religious beliefs, their thoughts, or their praise or satire of real life with kites to express their different emotions. Individual folk art does not exist alone in a certain place, but it is always dominated by one kind of folk art, around which many kinds of folk art objects are formed to constitute a folk art ecosystem. Weifang Yangjiabu kites and New Year paintings have a close relationship, both are traditional folk arts in the Yangjiabu area, echoing each other and constituting the traditional culture of Yangjiabu. The influence of Weifang Yangjiabu kites on New Year paintings is mainly reflected in the patterns and colors, production techniques, and cultural connotations. These influences reflect a unique way of expression and the mutual influence of cultural symbols in traditional Chinese culture. It can be said that Weifang Yangjiabu kites and New Year paintings are interrelated and influenced by each other. Both are representatives of the traditional culture of Yangjiabu, reflecting the wisdom and creativity of the local people. So to protect and develop a certain handicraft, it is important to pay attention to the construction and protection of the folk art ecosystem.

6.2.2 The Role of Kites in Yangjiabu's Cultural Ecology and the Cultural Value Chain

Just as language, dance, and other art forms are usually interpreted as products of imitation of natural and social phenomena, that is to say, kites are the "analogs" created by the elite or special people who simulate natural things or phenomena that dance with the wind, and fly with the wind with the help of their ingenuity and inspiration, because they meet and satisfy the needs of the majority of people for entertainment and games. Most people's entertainment and games need the majority of ordinary people to spread, spread to. Further, the re-creation of individual and collective wisdom is the main reason for the formation of all kinds of folklore, including kites. Newborn folk think from birth to be accepted by the majority of people until becomes a fixed pattern of life is not overnight, there is always a process from recognition to acceptance and then stereotyped as a customary habitual system. Kite flying is also the same, there is also a long process of trying to produce a recognized and perfected development. To a certain extent, the custom of kite flying is a folk culture inheritance phenomenon accumulated by human society over a long period, and it is a life pattern agreed upon by the group society. From a holistic and symbiotic viewpoint, kite flying, like other folk cultures, is a reflection of the social life of a certain historical period, and it is a synthesis of folklore, aesthetics, art,

history, and other multiple factors, which is the result of combining the material and spiritual life of the common people and the inevitable product of adapting to the requirements of both. Although kite-flying folklore is a "non-dominant mode of life" in the cultural life of the common people, its long history has already proved that it plays an important folklore function as well as inheritance value in the life of the common people.

Kites gradually developed into commodities through a long period of development. During the Song Dynasty, Weifang kites had developed greatly, and kite-making developed into a specialized occupation. During the Qianjia period of the Qing Dynasty, Weifang kites entered the heyday. Weifang kites in the Qing Dynasty became famous at home and abroad for their rich local color and folk atmosphere, and became an important livelihood for the folk residents to make a living, foreign merchants came here in an endless stream, and the business was very prosperous. At this time, kites went from folk custom "flying bad luck" to commercialization. With the self-sufficient small peasant economy providing an ecological environment for the development of folk art, many kite artists learned kite-making techniques from their fathers in the era of large family workshops. However, with the gradual disintegration of the extended family, the great impact brought by the capitalist economic system made the kite production method change, and the kite production method became more and more detached from the family and began to be based on factory production. Although the efficiency was improved, the quality of kites declined seriously in the vicious circle of low-price competition, which seriously affected the reputation of Weifang kites. In 1933, the county government of Weifang County of the then Republic of China decided to organize a kite competition every two years from then on according to the people's request. After the founding of New China, the economic development was unstable, and there were twists and turns during the period, until after the reform and opening up in 1978, Weifang kites were revitalized again. 1984 onwards, Weifang successfully held the International Kite Festival in succession; in 1988, Weifang was chosen by domestic and foreign kite flying circles as the "Kite Capital of the World"; in April 1989, approved by the State Council, the "International Kite Festivals" were held in Weifang. In April 1989, with the approval of the State Council, the "International Wind Union" was established in Weifang, and Weifang kites went to the world. 2004 Weifang International Kite Festival was listed as the cultural heritage and folk protection project of the UNESCO Folk Art Organization; the state attaches great importance to the protection of intangible cultural heritage, and on May 20, 2006, the Weifang kite-making skills were listed in the first batch of national-level kite-making skills approved by the State Council. On May 20, 2006, Weifang's kite-making skill was approved by the State Council to be included in the first batch of national intangible cultural heritages. The local government has implemented the model of "kites lead the way, culture and sports set up the stage, economic and trade sing", which has been widely borrowed from all

over the country. The organization of the International Kite Festival has enabled the world to understand Weifang and made Weifang go to the world faster, greatly promoting the development of Weifang's economy and tourism. The specific geographical environment, natural factors, and historical and humanistic factors of "Weifang Kites"; the material and folk culture and art connotation of "Weifang Kites"; the reputation of "Weifang Kites" at home and abroad, have contributed to the development of "Weifang Kites". The reputation of "Weifang Kites" at home and abroad has contributed to the birth of the "Weifang International Kite Festival" and the long-term development of this "international brand activity". Weifang Kite Festival is not only an important part of Chinese traditional culture, but also one of the cultural brands of Weifang City, which promotes the development of the local tourism industry and makes important contributions to the development of the local economy and society. It has made Weifang famous all over the world and promoted the overall development of Weifang. This also confirms the cultural and artistic value of "intangible cultural heritage" in contemporary times and its great role in promoting social development. Weifang kite industry has grown from small to big, the cultural industry of Weifang kite originated from the traditional kite commercial activities in Weifang and has become the characteristic industry of Weifang, gradually forming the kite industry chain, and at the same time, the traditional folk culture is also forming a perfect cultural value chain. Yangjiabu kites in Weifang, Shandong Province have experienced the historical lineage of germination, development and popularization, and prosperity under the social and cultural changes. Under the review of social and cultural perspectives, different social and cultural backgrounds in each period are the important factors affecting the development of kites, from the folk custom of "letting go of bad luck" to the commercialization, from the family workshop to the creation of kite factory, from folk art to the international kite festival. From folk art to international kite festivals, the development of kites is influenced by different historical conditions and social culture, and the way of interaction between kites and people is also different in different historical periods and social and cultural conditions, including different attitudes towards kites in different periods and changes in people's feelings carried by kite sports. And in the interaction with people, it constantly enriches and improves itself, and has different roles and cultural values in different historical periods. The combination of kite folk culture and economic and commercial behavior generates new economic growth points. The cultural industry of Weifang kites originates from the traditional kite commercial activities in Weifang. Weifang government departments utilize their advantages of deep traditional culture and rich folk culture to take the strategic road of "cultural economy" and actively guide the development of the functions and potentials of folk culture. The local government departments have formulated the policy of "kites pulling the strings, culture setting up the stage, and economic singing The local government departments have formulated the policy of "kites lead the line, culture take the stage, economy sing the show", which has opened up a thousand-mile folklore tourism line with strong

local cultural characteristics, and the Weifang Kite Festival has become one of the most large-scale and influential cultural brands in Shandong Province. The International Kite Festival has spawned and driven the Lutai Conference, China-Japan-Korea Industrial Expo, Shouguang Vegetable Expo, Changle International Gemstone Festival, and other festivals, which has set up a cooperation platform to carry out economic and cultural exchanges for the city of Weifang and has played an important role in enhancing the popularity of Weifang, promoting the fusion of cultural exchanges, and promoting cultural innovation. At the same time, Gaomi's paper-cutting, cloth toys, porcelain, clay figures, face molding, Yangjiabu's woodblock New Year's paintings, and other folk crafts such as wood carving and silver embedded in kites have been developed under the role of kite matching and formed an industrial and cultural chain.

6.2.3 Exploring Cultural Value Chain Management for Kite Culture Innovation in Yangjiabu, Weifang

Folk art belongs to the category of folk culture, which takes the folk culture ecosystem as the environment for survival and development. The replacement of agricultural civilization by the modern industrial civilization and the violent impact of the western strong culture on the Chinese traditional culture has caused the folk culture ecosystem to undergo a profound change, and the cultural ecological environment of the kite has changed accordingly. When a nation's culture encounters interference from outside forces, due to the original ecological vulnerability of its culture, this vulnerability is not only manifested in the natural environment but also in the cultural environment. The development of modern industrial civilization has brought convenience, utility, and even pleasure to people's lives, but because the focus has been mainly on the world of material production, no attention has been paid to the development of the inner world of human beings, their consciousness, and their emotions. As a result, an imbalance in the natural ecology has been created along with an imbalance in the cultural ecology. This imbalance is manifested not only in the destruction of the natural ecological environment but also in the change of the local people's way of life due to the destruction of the environment, which leads to the change of the cultural practices of the place. The survival of Yangjiabu kites itself is a complex system of the folk art system and belongs to a part of the social system, whether it can survive and develop in the society, mainly depends on whether its sub-system can be in order, healthy operation, and can coordinate with the development of the social system. The mechanism and principle of the survival of Yangjiabu kites is just like the ecosystem in biology, its survival and development are not isolated, and it has a close relationship with the social environment in which it lives. In the cognition of its survival or decline, we must jump out of the limitations of the folk art itself and put it back into the human ecosystem, and "observe" it from a larger and higher angle

and vision, so that we can fundamentally and essentially understand and master its development, survival mechanism and change rule (Zhang, 2016).

The social environment is the most primitive foundation for the occurrence and development of Yangjiabu kites, as well as the most fundamental element for the completeness and stability of the folk art ecological chain. Its special composition contains complex factors, such as geographic location, geographic environment, historical evolution, regional culture, and ways of survival, which subsequently produces a matching folk art ideology, a concept that is the people's life aspirations expressed in their daily lives and activities by seeking survival, tending to profit, and avoiding harm. As a folk art, the function of Yangjiabu kites is natural and must become a "prop" to satisfy such demands, assuming the function of a carrier of people's life demands in secular life. As a functional carrier, the folk art form naturally serves the purpose of its existence and realizes the value and meaning of its existence, and the pure and unique purpose also shapes the definite and patterned folk art existence form. The prevalence of the folk art forms formed by Yangjiabu kites in the social environment has become part of the social environment, strengthening and stabilizing the reality of the social environment. In this way, a cycle of folk art ecosystem is formed, and this cycle never stops flowing and continues, constituting the stable structure of the Yangjiabu kite folk art ecosystem. However, the factors of the ecosystem are always fluctuating in the change and development of society, and the ecological chain is closely linked to maintaining stability. A stable ecosystem will inevitably build a stable state of survival of folk art, and an unstable ecosystem will inevitably destroy the state of survival of folk art, and even make it decline and perish, therefore, putting folk art culture into the whole ecosystem as well as the generation and development of the cultural value chain for research and analysis appears to be of special significance and value.

With the maturity of the kite industry in Yangjiabu, Weifang, challenges and problems have arisen, such as changes in materials, inheritance groups, and functions, the impact of modern production technology on traditional handicrafts, and the collision of local and foreign cultures, etc. The Weifang government departments take advantage of their own deep traditional culture and rich folk culture, and take the strategic path of "cultural economy". The road to actively guide the development of the function and potential of folk culture, focusing on traditional folk art and cultural memory of the inheritance, the protection of traditional skills and cultural recognition, the protection of folk art ecosystems as well as the use of cultural exchanges and integration to promote the innovative development of folk art and culture and other measures, such as Gaomi's paper-cutting, cloth toys, porcelain, clay figures, face molding, woodblock prints in Yangjiabu and other kinds of folk crafts, such as wood carving, inlaid silver, all of them in the Kites have been developed and formed industrial and cultural chains under the role of kite matching. Information dissemination and exchange between different cultures can promote mutual

understanding and recognition between different cultures, promote cultural exchange and integration, and provide impetus for cultural innovation. Weifang Kite Festival is an important cultural activity in Weifang, which promotes the development of the local tourism industry, but it is not only a traditional folklore activity, but also a platform for displaying kite-making skills, inheriting and promoting kite-making skills and local culture, strengthening foreign exchange and cooperation, introducing new perspectives, concepts, and resources, jointly researching and developing folk art and culture, and promoting the exchange and integration of folk art and culture with foreign cultures, which is important for the The inheritance of kite skills and cultural innovation plays a role in promoting. Folk art is not only a piece of art or decoration, but also an expression of values and emotions. Only by constantly strengthening the inheritance of traditional folk art and cultural memory can folk art be better protected and innovatively developed. In addition, traditional skills are an important part of folk art and culture, crafts people put their heart and passion into the creation of handicrafts with unique artistic charm and ornamental value, has great artistic and cultural value, at the same time, foreign cultures can adapt to the needs of the local community and the characteristics of the local culture, self-adjustment, and change. The collision between local and foreign cultures can also bring the opportunity for cultural integration (Zhang, 2015). When two cultures merge, they will penetrate and integrate to form a new culture and cultural chain, which provides development opportunities for the inheritance and innovation of traditional folk art. Yangjiabu kites in Weifang, Shandong Province can learn from the characteristics and elements of kite culture of other regions and nationalities, and integrate them into Weifang kite-making techniques and designs, enriching the development of diversity of Weifang kites as well as promoting cultural innovation. The collision of local and foreign cultures can also bring the opportunity for cultural integration. When two cultures merge, they will penetrate and integrate, forming a new culture and cultural chain and providing development opportunities for the inheritance and innovation of traditional folk arts.

In conclusion, the cultural value chain involves all links and components of the cultural industry, relates to the association and interaction between all links and components of the cultural industry as well as with other industries, and is the process of value creation and distribution of the cultural industry. It also involves the process of creation, production, and dissemination of cultural products, in which each link generates value. In this process, creativity is the core element, which can be transformed into specific cultural products through various forms such as art, design, and media. These cultural products are then disseminated to consumers through different channels and platforms to satisfy their spiritual and cultural needs. The cultural industry is not isolated, it has close connections with other industries such as tourism, education, science, and technology. The association and interaction between these industries can form a longer industrial chain and a bigger industrial cluster, thus

promoting the development of the whole economy and society. It also involves the globalization and localization of cultural industries. In the context of globalization, the development of cultural industries needs to take into account the cultural differences and needs of different countries and regions, and at the same time, it needs to maintain the characteristics and advantages of local culture. This requires a reasonable layout and adjustment in the cultural value chain to realize the organic combination of globalization and localization. The perspectives of cultural ecology and cultural value chain provide a brand new research perspective and a holistic, systematic, and scientific research method for us to understand kites and study kites as a traditional handicraft, which helps to break through the academic level of kite research and provides theoretical support for us to analyze the connotation and development space of kite culture at a broader level. Yangjiabu kite carries out the balance and development of Weifang Yangjiabu kite culture through the protection and continuation of traditional skills and inheritance methods, the revival of traditional festivals and festival culture, the construction of cultural value chain, and the strengthening of cultural exchanges. Therefore, the formation and construction of the value chain of traditional kite culture requires multifaceted cooperation and exchanges, and each link is indispensable from the inheritance of skills to cultural innovation, and from industrial development to international exchanges and cooperation. Only through the joint efforts and support of the whole society can the inheritance and development of kite culture be promoted and its greater value and influence be realized.

6.3 Research Recommendations

6.3.1 Academic Advice

Researchers should observe and study Weifang Yangjiabu kites from the dimension and way of thinking of cultural ecology, not simply focusing on its development and craft technology, but treating the whole cultural ecology as a whole to study and think about, considering the relationship between the elements in the middle, and thinking about its position and role in the whole cultural ecosystem, to more comprehensively excavate the value of the art. As for the inheritance and protection of kite art, both the official and private sectors focus on the protection, inheritance, and innovation of kite-making techniques from the perspective of main protection, while there are fewer comprehensive explorations and research on the cultural ecology from the perspectives of natural ecology, political ecology, social ecology as well as the survival, development, and change of kite culture under the viewpoint of economics and management, so it has the value of research. The research in this paper provides a new research perspective for further understanding and studying folk art. Art researchers can broaden their research ideas and horizons. Taking cultural ecology as well as economic management as theoretical support, it can

break through the inherent paradigm of traditional kite culture research and build a theoretical structure with more academic value. Analyzing the reasons for the generation of culture and value chain from the perspective of human sociology is meaningful for theoretical research. The ideas in this paper are not only for the study of the social life and cultural ecology and value of kites, but can also be used to study other folk art carriers and phenomena around the world, providing theoretical research samples for the ecological development of traditional folk art.

6.3.2 Social Suggestions

This study can help local governments to formulate as well as improve policies to further explore the connotations of local folk art and culture, and to promote cultural policies or cultural programs for the development of local tourism. In addition, the focus of kite-related producers is generally on how to rapidly increase production and earn profits, and they do not pay much attention to the positive influence of geographic, social, and humanistic factors on kite culture, which results in a considerable degree of patterned traces in the produced kite works of art, seriously restricting the healthy and rapid development of Chinese kite art and industry. Although there have been a lot of mature and rich achievements in the research of kites, they focus on the updating of production technology, and the key achievements are also reflected in the crafts such as kite making, and the research on the artistic and cultural ontology of kites has been diluted, which all belong to the way of social inheritance of skills, one-sidedly pursuing the development of industry, and neglecting the sustainable protection and development of the kite cultural ecology. Therefore, focusing on the cultural ecology of kites and the operation and management of the cultural value chain can help artists or the art world to better understand and study folk art more comprehensively by providing a more comprehensive research perspective, and using the folk art form as well as the culture for artistic creation as well as the innovation of art and culture, promoting the development of the cultural ecology of the folk art and providing a sample reference for the development of cultural ecology for other folk art.

6.3.3 General Advice

This study describes the relationship between kites and cultural ecology in Yangjiabu, Weifang, and the process of generating and developing the cultural value chain as the Weifang International Kite Festival becomes a world festival with the opportunity to hold the festival as well as the commercialization of the city's brand image and the cultural value chain, but there are still some limitations of the study. First of all the source of information, in this study is based on a field survey and literature review. During the survey, respondents may make subjective judgments and descriptions of the development of kites due to their occupations and positions, and part of the information is described verbally by the elderly, there may also be problems such as

bias or errors, which can be avoided by collecting the opinions of as many respondents as possible. On the other hand, quantitative research can be used in future studies to improve the precision of the study and supplement qualitative research.

พหูนํ ปณฺฑิโต ชีเว

REFERENCES

Abakarova, R. M., & Gadzhinayev, G. M. (2013). The ecological basis of folk art. *Ûg Rossii: èkologiâ, razvitie*. https://doi.org/10.18470/1992-1098-2013-3-27-33

Adam, E. S. (2015). Integrated Management of the Cultural Tourism Products Based on the Value Chain. *Journal of Economics, Management and Trade*. https://doi.org/10.9734/BJEMT/2015/18974

An, L. (2018). Talking about the revival of traditional handicrafts from the perspective of historical functionalism-taking Weifang kites as an example. *Ethnic Art*, 62-68.

AN, X., & TING, Q. (2017). Research on Value Chain Composition and Effect of Jingdezhen Ceramic Culture Creative Industry. *Proceedings of the 2017 International Conference on Arts and Design,Education and Social Sciences(ADESS 2017)*, 62-68.

Andreja, J., & Slobodan, Å. e. u. (2019). Commercial diplomacy's role in entering foreign markets in the age of global value chains. *International Journal of Diplomacy and Economy*.

Chen, L. (2017). Research on the Mechanism of Weifang Characteristic Industrial Cluster Generation Based on Regional Culture. *Journal of Weifang Engineering Vocational College*, 5-8.

Cui, H. (2020). *Research on Weifang Folk Culture Tourism Resources Development* Shandong Normal University]. Jinan.

Dave, S., Joe, F., & Jorge, K. (2020). A brief history of kite physics. *The Physical World*, 13. https://doi.org/10.1088/2058-7058/33/2/28

Doan, N. T. (2023). *Cultural proximity and global value chains* International Economics].

Du, W. (2015). *Bamboo branch sound bamboo branch-Weifang bamboo industry and related folk customs* Sichuan Provincial Institute of Science and Technology Information]. Chengdu.

Guo, W. (2023). *Research on the Development Mechanism and Optimization Strategy of Yangjiabu Non-legacy Tourism* Qingdao University]. Qingdao.

Han, J. (2019). *Inheritance and Protection of Weifang Handicraft Intangible Cultural Heritage under the Perspective of Cultural Ecology* Qingdao University of Technology]. Qingdao.

Hao, T. (2023). *Weifang Kite Cultural and Creative Design Application Research* Shandong Academy of Arts and Crafts]. Jinan.

Huang, P. L. (2020). *Weifang Wangcun kite industry development research* Shandong Institute of Physical Education]. Jinan.

Ji, S., & Shi, A. (2018). Research on the industrialization of Weifang kite culture and its development. *Popular Literature and Art*, 246-247.

Jia, Y. (2016). Weifang Kite Making Technique. *China's National Condition and National Strength*, 82. https://doi.org/10.5121/ijmvsc.2016.7302

Li, X. (2019). Stylistic Subjects and Artistic Characteristics of Weifang Kites. *Art Appreciation*, 163-164.

Lin, Y. (2018). *Research on the path of industrialization and development of Weifang kites* Nanjing Arts Institute]. Nanjing.

Liu, G. (2016). Historical evolution of kites in Weifang. *Humanistic world*, 69-71. https://doi.org/10.5121/ijmvsc.2016.7302

Liu, J. (2023). *Theoretical Logic and Development Path of Yangjiabu Kite Industry Revitalization under the Perspective of Cultural Consumption* Shandong Academy of Arts]. Jinan.

Lu, F., & Wang, C. (2019). Research on the Development of Museum Creative Products from the Perspective of Regional Culture Based on Value Chain. *Proceedings of 2019 5th International Conference on Economics,Management and Humanities Science*, 79.

Lv, J. (2016). Shandong Weifang kite modeling characteristics and aesthetic connotation. *Popular Literature and Art*, 85. https://doi.org/10.5121/ijmvsc.2016.7302

Park, J.-S. (2008). A study on the change of value chain and strategies of standardization in the Cultural Contents Industry. *Journal of Korea Culture Industry*.

Qi, Y. (2022). *Study on the Branding Path of Intangible Cultural Heritage in Weifang Water Basin under the Perspective of Culture and Tourism Integration: Yangjiabu Culture as an Example* Anhui Science Education Research Association]. Hefei.

Satvant, s., Priyanshu, T., Kanchana, V. K., & Swapan, M. (2016). NTFPs Value Chain Development for Rural Communities of Madhya Pradesh. *International Journal of Managing Value and Supply Chains*. https://doi.org/10.5121/ijmvsc.2016.7302

Song, Q. (2015). *Weifang kite research. Sports and Culture Guide* Sports Culture Development Center of the State General Administration of Sports]. Beijing.

South, C., & Daley. (2010). In April, let the kite fly. *Chinese women*.

Sun, X. (2023). *The Path of Mass Communication of National Intangible Cultural Heritage Weifang Kites* Southwest University]. Chongqing.

Tang, J. (2008). *A study on the change of value chain and strategies of standardization in the Cultural Contents Industry* Shandong University]. Jinan.

TIAN, F. (2011). Research on the Path of Value-chain Integration in China's Cultural and Creative Industry. *Proceedings of 2011 International Conference on Public Administration(7th)*, *///*, 959-963.

Wang, N., & Zhao, Y. (2022). Weifang Cultural and Creative Industries Focusing on High Quality Development. *Toward the World*, 4-5.

Wang, Q., & Zhao, X. (2021). Development and Conservation of Weifang Kites. Sichuan Sports Science. *Sichuan Sports Science*, 106-108+116.

Wang, T., Shi, X., & Lin, Y. (2022). The Inheritance and Development of Weifang Kites under the Perspective of New Media. *Fashion Design and Engineering*, 66-69.

Wang, X., & Gao, Y. (2023). Research Progress and Implications of Domestic Kite Festival 1980-2021. *Green Science and Technology*, 244-249.

William, D. P. J., R.Mawhinney. (2009). Reexamine the value chain. *International value chain management*.

Wu, Q. (2023). *The New Flight of Weifang Kites. Toward the World* Information Office of Shandong Provincial People's Government]. Jinan.

Wu, Y. (2019). *Exploration on the Research and Inheritance Development Path of Kite Art in Bohai Rim* Shanghai University]. Shanghai.

Xiao, X., & Dai, Q. (2023). *Research on Weifang Kites' Non-Genetic Inheritance and Innovation under the Perspective of Rural Revitalization* Shandong Academy of Arts]. Jinan.

Yang, J., & Sun, X. (2020). Research on the Industrialization and Protection of Weifang Intangible Cultural Heritage. *Industry and Technology Forum*, 209-211.

Yang, L. (2010). *On the plastic arts characteristics of Weifang kite from the internal quality of culture* Guangxi Normal University]. Guilin.

Yao, W. (2023). *Information Visualization Design of Weifang Kites. Collection and Investment* Collection and InvestmentInformation Visualization Design of Weifang Kites]. Haikou.

Yin, K. (2013). *History, Technology and Concept-Anthropological interpretation of Yangjiabu kite craft* Minzu University of China]. Beijing.

Zhang, J. (2016). An Examination of Weifang Kites. *Sports Culture Guide*, 48-51. https://doi.org/10.5121/ijmvsc.2016.7302

Zhang, J. (2017). Research on Traditional Kites in Weifang, Shandong. *Tomorrow's Style*, 329.

Zhang, Z. (2015). *Research on Aesthetic Elements and Innovation of Weifang Kite Design* Harbin University of Technology]. Harbin.

Zhao, H. (2017). Current Situation, Problems and Countermeasures of Kite Industry Development in Weifang. *Journal of Henan Mechanical and Electrical Higher Specialized School*, 27-31.

Ziz, I. M., Akramqiong, Ziz, Y. M., Malofqiong, Ziz, B. I. I., Yodgorali, Z. T. B. N., Sh.M., M., Sh.M., M., & IA, K. (2021). The role of festivals in the development of folk art. *ACADEMICIA: An International Multidisciplinary Research Journal*. https://doi.org/10.5958/2249-7137.2021.02144.3

Zou, X. (2021). Analysis of Weifang Kite Art in Modern Art Design. *Art Appreciation*, 47-48.

พหูนํ ปณฺฑิโต ชีเว

BIOGRAPHY

NAME	Susu Zhang
DATE OF BIRTH	1983.11.01
PLACE OF BIRTH	Luoyang City, Henan Province, China
ADDRESS	Faculty of Fine Arts and Cultural Sciences Mahasarakham University, Thailand
POSITION	teacher
PLACE OF WORK	Luoyang Vocational College of Science and Technology
EDUCATION	2008, Bachelor of Arts, Academy of Fine Arts, Shandong University, China. 2013, Master of Art and Design, Academy of art, Kunming University of Science and Technology, China. 2024, Ph. D. in Research and Creation in Fine and Applied Arts, Faculty of Fine Applied Arts and Cultural Sciences, Mahasarakham University, Thailand.

พหูนํ ปณฺฑิโต ชีเว